IS23520VSP Rev-C

MaxFlo VS™ 500

Owner's Manual

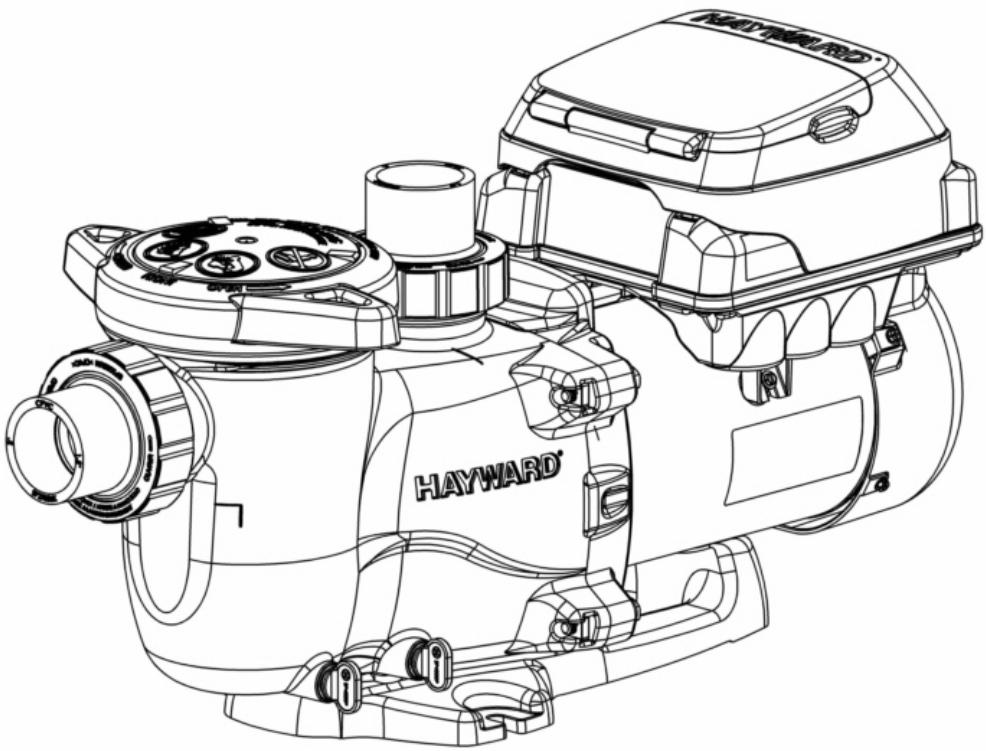

Model SP23520VSP

MaxFlo VS 500 Variable Speed Pump

Hayward's MaxFlo VS 500 variable speed pump delivers incredible energy savings via its advanced hydraulic design combined with a totally enclosed, permanent magnet motor. MaxFlo VS 500 is easily installed either as a programmable stand-alone pump or with a Hayward or third party controller and features an easy-to-use digital control interface that can be mounted in four different positions on the pump or removed and mounted on the wall for total user convenience.

Note: To prevent potential injury and to avoid unnecessary service calls, read this manual carefully and completely. Unless otherwise stated, instructions in this manual apply to both pump models.

SAVE THIS INSTRUCTION MANUAL

Hayward Pool Products
620 Division St, Elizabeth, NJ 07207
Phone: (908) 355-7995
www.hayward.com

HAYWARD®

Table of Contents

1. IMPORTANT SAFETY INSTRUCTIONS 4
2. General Information 7
   2.1. Introduction 7
   2.2. Primary Features 7
   2.3. Product Dimensions 7
3. Energy Efficiency Overview 8
4. Installation and Wiring 8
   4.1. Pump Location 8
   4.2. Pump Mounting 9
   4.3. Pipe Sizing Chart 9
   4.4. Plumbing 9
   4.5. Electrical 10
   4.6. Electrical Specs 10
   4.7. Voltage 10
   4.8. Grounding and Bonding 10
   4.9. Wiring 10
   4.10. Remote Control Wiring/Operation 11
   4.11. Digital Control Interface Orientation 11
   4.12. Interface Wall Mounting 12
   4.13. Installation Procedure 14
5. Wiring Diagrams 15
   5.1. Input Power Wiring (Required) 15
   5.2. Wall Mounted Digital Control Interface Wiring (Optional) 15
   5.3. External Relay Speed Control Wiring (Optional, for remote selection of pump speed) 16
   5.4. Hayward Automation Control Wiring (Optional, for remote control of pump speed) 17
   5.5. Remote Stop Switch Wiring (Optional) 18
6. Startup & Operation 18
   6.1. Prior to Start-Up 18
   6.2. Starting/Priming the Pump 19
   6.3. User Interface Summary 20
   6.4. Menu Outline 21
   6.5. Initial startup 21
   6.6. Configuration Menu 22
   6.7. Timer Menu 23
   6.8. Preset Speed Setup Menu 24
   6.9. Diagnostic Menu 24
   6.10. Stop/Resume 25
   6.11. Quick Clean 25
   6.12. Remote Stop 26
7. Maintenance 26
8. Storage / Winterization 26
   8.1. Storing Pump For Winterization 26
9. Shaft Seal Change Instructions 27
   9.1. Removing the Motor Assembly 27

9.2. Removing the Impeller 27
9.3. Removing the Ceramic Seat 27
9.4. Seal Installation 27
9.5. Replacing the Impeller and Diffuser 27
9.6. Replacing the Motor Assembly 28
10. Replacement Parts 28
10.1. Parts Diagram 28
10.2. Parts Listing 29
11. Troubleshooting 30
11.1. General Problems 30
11.2. Check System Messages 32
12. Warranty 33
13. Product Registration 33

1. IMPORTANT SAFETY INSTRUCTIONS

Before installing or servicing this electrical equipment, turn power supply OFF.

Basic safety precautions should always be followed, including the following: Failure to follow instructions may result in injury.

This is the safety-alert symbol. When you see this symbol on your pump or in this manual, look for one of the following signal words, and be alert to the potential for personal injury.

WARNING warns about hazards that **could** cause serious personal injury, death or major property damage and if ignored presents a potential hazard.

CAUTION warns about hazards that **will** or **can** cause minor or moderate personal injury and/or property damage and if ignored presents a potential hazard. It can also make consumers aware of actions that are unpredictable and unsafe.

The **NOTICE** label indicates special instructions that are important but not related to hazards.

WARNING – **READ AND FOLLOW ALL INSTRUCTIONS** in this owner's manual and on the equipment. Failure to follow instructions can cause severe injury and/or death.

WARNING – This product should be installed and serviced only by a qualified professional.

CAUTION – All electrical wiring MUST be in conformance with all applicable local codes, regulations, and the National Electric Code (NEC).

USE OF NON-HAYWARD REPLACEMENT PARTS VOIDS WARRANTY.

ATTENTION INSTALLER - THIS MANUAL CONTAINS IMPORTANT INFORMATION ABOUT THE INSTALLATION, OPERATION, AND SAFE USE OF THIS VARIABLE SPEED PUMP THAT MUST BE FURNISHED TO THE END USER OF THIS PRODUCT. FAILURE TO READ AND FOLLOW ALL INSTRUCTIONS COULD RESULT IN SERIOUS INJURY.

WARNING – To reduce risk of injury, do not permit children to use or climb on this product. Closely supervise children at all times. Components such as the filtration system, pumps, and heaters must be positioned to prevent children from using them as a means of access to the pool.

CAUTION – This pump is intended for use on permanently installed swimming pools and may also be used with hot tubs and spas if so marked. Do NOT use with storable pools. A permanently installed pool is constructed in or on the ground or in a building such that it cannot be readily disassembled for storage. A storable pool is constructed so that it is capable of being readily disassembled for storage and reassembled to its original integrity. Though this product is designed for outdoor use, it is strongly advised to protect the electrical components from the weather. Select a well-drained area, one that will not flood when it rains. It requires free circulation of air for cooling. Do not install in a damp or non-ventilated location. If installed within an outer enclosure or beneath the skirt of a hot tub or spa, adequate ventilation and free circulation of air must be provided to prevent overheating of the motor.

WARNING – Pool and spa components (seals, gaskets, etc.) have a finite life. All components should be inspected frequently and replaced at least every ten years, or if found to be damaged, broken, cracked, missing, or not securely attached.

WARNING – **Risk of Electric Shock.** All electrical wiring MUST be in conformance with applicable local codes, regulations, and the National Electric Code (NEC). Hazardous voltage can shock, burn, and cause death or serious property damage. To reduce the risk of electric shock, do NOT use an extension cord to connect unit to electric supply. Provide a properly located electrical receptacle. Before working on pump or motor, turn off power supply to the pump.

WARNING – To reduce the risk of electric shock replace damaged wiring immediately. Locate conduit to prevent abuse from lawn mowers, hedge trimmers and other equipment.

WARNING – **Risk of Electric Shock.** In accordance with the National Electric Code (NEC), connect only to a branch circuit protected by a ground-fault circuit-interrupter (GFCI). Contact a qualified electrician if you cannot verify that the circuit is protected by a GFCI. The unit must be connected only to a supply circuit that is protected by a ground-fault circuit-interrupter (GFCI). Such a GFCI should be provided by the installer and should be tested on a routine basis. To test the GFCI, push the test circuit button. The GFCI should interrupt power. Push the reset button. Power should be restored. If the GFCI fails to operate in this manner, the GFCI is defective. If the GFCI interrupts power to the pump without the test button being pushed, a ground current is flowing, indicating the possibility of an electric shock. Do not use this pump. Disconnect the pump and have the problem corrected by a qualified service representative before using.

WARNING – Failure to bond pump to pool structure will increase risk for electrocution and could result in injury or death. To reduce the risk of electric shock, see installation instructions and consult a professional electrician on how to bond pump. Also, contact a licensed electrician for information on local electrical codes for bonding requirements.

Notes to electrician: Use a solid copper conductor, size 8 or larger. Run a continuous wire from external bonding lug to reinforcing rod or mesh. Connect a No. 8 AWG (8.4 mm^2) [No. 6 AWG (13.3 mm^2) for Canada] solid copper bonding wire to the pressure wire connector provided on the pump housing and to all metal parts of swimming pool, spa, or hot tub, and to all electrical equipment, metal piping (except gas piping), and conduit within 5 ft. (1.5 m) of inside walls of swimming pool, spa, or hot tub. IMPORTANT - Reference NEC codes for all wiring standards including, but not limited to, grounding, bonding and other general wiring procedures.

WARNING – **Suction Entrapment Hazard.** Suction in suction outlets and/or suction outlet covers, which are damaged, broken, cracked, missing, or unsecured cause severe injury and/or death due to the following entrapment hazards (symbols complements of APSP):

Hair Entrapment - Hair can become entangled in suction outlet cover.

Limb Entrapment - A limb inserted into an opening of a suction outlet sump or suction outlet cover that is damaged, broken, cracked, missing, or not securely attached can result in a mechanical bind or swelling of the limb.

Body Suction Entrapment - A differential pressure applied to a large portion of the body or limbs can result in an entrapment.

Evisceration/ Disembowelment - A negative pressure applied directly to the intestines through an unprotected suction outlet sump or suction outlet cover which is damaged, broken, cracked, missing, or unsecured can result in evisceration/disembowelment.

Mechanical Entrapment - There is potential for jewelry, swimsuits, hair decorations, fingers, toes, or knuckles to be caught in an opening of a suction outlet cover resulting in mechanical entrapment.

WARNING – To Reduce the risk of Entrapment Hazards:

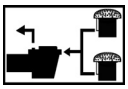

- When outlets are small enough to be blocked by a person, a minimum of two functioning suction outlets per pump must be installed. Suction outlets in the same plane (i.e. floor or wall), must be installed a minimum of three feet (3') [0.91 meter] apart, as measured from near point to near point.
- Dual suction fittings shall be placed in such locations and distances to avoid "dual blockage" by a user.
- Dual suction fittings shall not be located on seating areas or on the backrest for such seating areas.
- The maximum system flow rate shall not exceed the values shown in the "Pipe Sizing Chart" found in section 4.3 below.
- Never use pool or spa if any suction outlet component is damaged, broken, cracked, missing, or not securely attached.
- Replace damaged, broken, cracked, missing, or not securely attached suction outlet components immediately.
- In addition to two or more suction outlets per pump installed in accordance with latest APSP standards and CPSC guidelines, follow all national, state, and local codes applicable.
- Installation of a vacuum release or vent system, which relieves entrapping suction, is recommended.

WARNING – Hazardous Pressure. Pool and spa water circulation systems operate under hazardous pressure during start-up, normal operation, and after pump shut-off. Stand clear of circulation system equipment during pump start-up. Failure to follow safety and operation instructions could result in violent separation of the pump housing and cover due to pressure in the system, which could cause property damage, severe personal injury, or death. Before servicing pool and spa water circulation system, all system and pump controls must be in off position and filter manual air relief valve must be in open position. Before starting pump, all system valves must be set in a position to allow system water to return back to the pool. Do not change filter control valve position while pump is running. Before starting pump, fully open filter manual air relief valve. Do not close filter manual air relief valve until a steady stream of water (not air or air and water mix) is discharged from the valve. All suction and discharge valves MUST be OPEN when starting the circulation system. Failure to do so could result in severe personal injury and/or property damage.

WARNING – Separation Hazard. Failure to follow safety and operation instructions could result in violent separation of pump components. Strainer cover must be properly secured to pump housing with strainer cover lock ring. Before servicing pool and spa circulation system, all system and pump controls must be in off position and filter manual air relief valve must be in open position. Do not operate pool and spa circulation system if a system component is not assembled properly, damaged, or missing. Do not operate pool and spa circulation system unless filter manual air relief valve body is in locked position in filter upper body. All suction and discharge valves MUST be OPEN when starting the circulation system. Failure to do so could result in severe personal injury and/or property damage.

WARNING – Never operate the circulation system at more than 50 PSI maximum.

WARNING – Fire and burn hazard. Motors operate at high temperatures and if they are not properly isolated from any flammable structures or foreign debris they can cause fires, which may cause severe personal injury or death. It is also necessary to allow the motor to cool for at least 20 minutes prior to maintenance to minimize the risk for burns.

WARNING – Failure to install according to defined instructions may result in severe personal injury or death.

SAVE THESE INSTRUCTIONS

USE ONLY HAYWARD GENUINE REPLACEMENT PARTS

2. General Information

2.1. Introduction

This manual contains information for the proper installation and operation of the Hayward MaxFlo VS 500 Variable Speed Pump. The instructions in this manual MUST be followed precisely.

2.2. Primary Features

- Totally enclosed, permanent magnet motor
- Advanced hydraulic design
- Fully programmable with a self-contained 24-hour clock and up to 8 custom speed and timer functions
- For enhanced pool management, can be controlled by Hayward or third party pool and spa control platforms, without the need for additional accessories
- Digital control interface that can be mounted in four different positions on the pump or removed and mounted on the wall
- Motor drive includes built-in protection for high temperatures and voltage fluctuations. Drive is also designed to withstand temperatures below freezing without issue

2.3. Product Dimensions

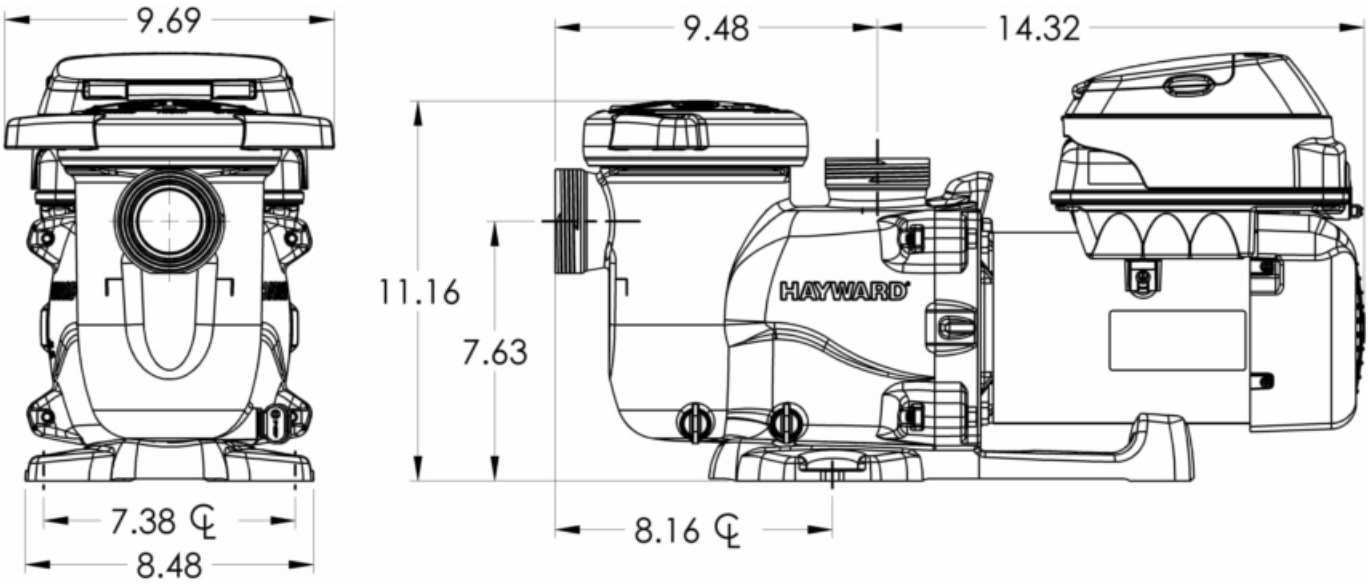

3. Energy Efficiency Overview

The energy consumed by a pool pump is measured in terms of Watts (W) or Kilowatts (kW). The MaxFlo VS 500 Variable Speed Pump displays power consumption in Watts. Given this information, you can determine the cost of operating the pump:

Power consumption of pump X Cost of electricity = Cost of Pump Operation per Hour

Example: MaxFlo VS 500 Variable Speed Pump operating at 300 W. Cost of electricity = $0.10 per kWh
Convert Watts to Kilowatts: 300 W = 0.3 kW
0.3 kW X $0.10/kWh = $0.03 per hour

Note the power consumption is greatly affected by the speed of the pump. Lowering the speed of the pump can drastically reduce the power that is consumed. Below are some of the major benefits of running the pump at lower speeds.

Benefits of running at low speeds

- Save electricity and money
- Improved filtration – the filter can often remove smaller particles when the water moves slower
- Quiet operation
- Reduced Total Dynamic Head – less stress on equipment (e.g. filter) which can lengthen equipment life

When determining the speed(s) to operate your pump, you must also take into account the minimum requirements for proper sanitation and equipment/water feature functionality.

It is recommended you filter ("turnover") all the water in the pool at least once every 24 hours. Check with local requirements for the minimum turnover rate. Running the pump at a lower speed may require running the pump for a longer period of time in order to meet the turnover requirements for proper sanitation.

Equipment such as heaters, skimmers, and chlorinators require minimum flows to operate correctly. Refer to individual equipment manuals for specific flow requirements.

After setting the pump speed(s), it is recommended you check that all other equipment/water features are functioning as intended. For example, when running at a low speed for daily filtration, verify water is adequately flowing over the skimmer weirs. Operate the pump at higher speeds for the shorter periods of time needed to operate a heater, water feature, etc.

4. Installation and Wiring

⚠ **WARNING** – This product should be installed and serviced only by a qualified professional.

4.1. Pump Location

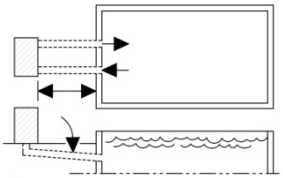

Locate pump as close to pool as practical and run suction lines as direct as possible to reduce friction loss. Suction lines should have continuous slope upward from lowest point in line. Joints must be tight (but not over-tightened). Suction line diameter must equal or be larger than the discharge line diameter.
Though the pump is designed for outdoor use, it is advised to place pump and filter in the shade to shield them from continuous direct heat. Select a well-drained area that will not flood when it rains. Do NOT install pump and filter in a damp or non-ventilated location. Keep motor clean. Pump motors require free circulation of air for cooling.

4.2. Pump Mounting

Install pump on a level concrete slab or other rigid base to meet all local and national codes. Secure pump to base with screws or bolts to further reduce vibration and stress on pipe or hose joints. The base must be level, rigid, and vibration free.

Pump mount must:

- Allow pump inlet height to be as close to water level as possible.
- Allow use of short, direct suction pipe (to reduce friction losses).
- Allow for valves in suction and discharge piping.
- Be protected from excess moisture and flooding.
- Allow adequate access for servicing pump and piping.

4.3. Pipe Sizing Chart

MAXIMUM RECOMMENDED SYSTEM FLOW RATE BY PIPE SIZE		
Pipe Size in. [mm]	**Maximum Flow Rate GPM [LPM]**	**Minimum Straight Pipe Length "L" in. [mm] ***
1 ½" [50]	45 [170]	7 ½" [190]
2" [63]	80 [300]	10" [254]
2 ½" [75]	110 [415]	12 ½" [317]
3" [90]	160 [600]	15" [381]

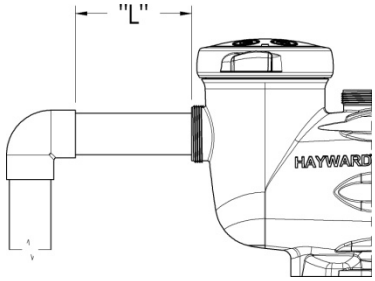

Note: It is recommended that a minimum length of straight piping (shown as "L" in above diagram), equivalent to 5 pipe size diameters, be used between the pump suction inlet and any plumbing fittings (elbows, valves, etc.).

When installing the MaxFlo VS 500, care should be taken to ensure proper pipe and equipment sizing to handle the maximum flow required. It is recommended to set the maximum speed in order to not exceed the maximum flow rate. See section 6.6 item #7.

WARNING – Hazardous Pressure. Pumps, filters, and other equipment/ components of a swimming pool filtration system operate under pressure. Incorrectly installed and/or improperly tested filtration equipment and/or components may fail resulting in severe personal injury or death.

4.4. Plumbing

1. Use PTFE tape to seal threaded connections on molded plastic components. All plastic fittings must be new or thoroughly cleaned before use. NOTE - Do NOT use Plumber's Pipe Dope as it may cause cracking of the plastic components. When applying PTFE tape to plastic threads, wrap the entire threaded portion of the male fitting with one to two layers of tape. Wind the tape clockwise as you face the open end of the fitting, beginning at the end of the fitting. The pump suction and outlet ports have molded-in thread stops. Do NOT attempt to force hose connector fitting past this stop. It is only necessary to tighten fittings enough to prevent leakage. Tighten fitting by hand and then use a tool to engage fitting an additional 1 ½ turns. Use care when using PTFE tape as friction is reduced considerably; do NOT over-tighten fitting or you may cause damage. If leaks occur, remove connector, clean off old PTFE tape, re-wrap with one to two additional layers of PTFE tape, and re-install connector.
2. Fittings (elbows, tees, valves, etc.) restrict flow. For better efficiency, use the fewest possible fittings. Avoid fittings that could cause an air trap. Pool and spa fittings MUST conform to the International Association of Plumbing and Mechanical Officials (IAPMO) standards.

4.5. Electrical

WARNING – All electrical wiring MUST conform to local codes, regulations, and the National Electric Code (NEC).

WARNING – Ground and bond pump before connecting to electrical power supply. Failure to ground and bond pump can cause serious or fatal electrical shock hazard. Do NOT ground to a gas supply line. To avoid dangerous or fatal electrical shock, turn OFF power to pump before working on electrical connections. Fire Hazard - match supply voltage to pump nameplate voltage. Insure that the electrical supply available agrees with the pump's voltage, phase, and cycle, and that the wire size is adequate for the amps rating and distance from the power source. Use copper conductors only.

4.6. Electrical Specs

1. Voltage: 230VAC, 60Hz, Single Phase
2. Amps: 0.4 - 10.0
3. Speed Range: 600-3450 rpm

Use copper conductors only. For indoor & outdoor use. Connect pump to a 15 amp branch circuit in accordance with local codes, regulations, and the National Electric Code (NEC). A disconnecting means located at least 5 ft. from the inside wall of the pool, spa, or hot tub must be provided.

4.7. Voltage

Voltage at pump MUST NOT be more than 10% above or below nameplate rated voltage, or components may overheat, causing overload tripping and reduced component life. If voltage is less than 90% (207 VAC) or more than 110% (253 VAC) of rated voltage (230 VAC) when pump is running at full load, consult the power company.

4.8. Grounding and Bonding

1. Install, ground, bond, and wire pump in accordance with local or national electrical code requirements.
2. Permanently ground pump. Use green ground terminal provided under access plate; use size and type wire required by code. Connect ground terminal to electrical service ground.
3. Bond pump to pool structure. Bonding will connect all metal parts within and around the pool with a continuous wire. Bonding reduces the risk of a current passing between bonded metal objects, which could potentially cause electrical shock if grounded or shorted. Reference NEC codes for all wiring standards including, but not limited to, grounding, bonding and general wiring procedures.
4. Use a solid copper conductor, size 8 or larger. Run wire from external bonding lug to reinforcing rod or mesh. Connect a No. 8 AWG (8.4 mm^2) [No. 6 AWG (13.3 mm^2) for Canada] solid copper bonding wire to the pressure wire connector provided on the motor housing and to all metal parts of swimming pool, spa, or hot tub, and to all electrical equipment, metal piping (except gas piping), and conduit within 5 ft. (1.5 m) of inside walls of swimming pool, spa, or hot tub.

4.9. Wiring

WARNING – All electrical wiring MUST conform to local codes, regulations, and National Electric Code (NEC)

1. Pump MUST be permanently connected to circuit. If other lights or appliances are also on the same circuit, be sure to add their amp loads before calculating wire and circuit breaker sizes. Use the circuit breaker as the master On-Off switch.
2. If the MaxFlo VS 500 pump is being used to replace an existing pump that was controlled by a separate mechanical time clock, the MaxFlo VS 500 pump should be connected directly to the line power supply, bypassing the time clock. The time clock can then be used to power other equipment (such as a heater, heat pump, or booster pump) that requires the filter pump to be operating when used. If the time clock is used in this manner, it should be set to power the equipment during a time cycle when the MaxFlo VS 500 pump is operating at an appropriate flow rate to operate the other equipment, as defined by the timers set in the Timer Menu. See section 6.7

4.10. Remote Control Wiring/Operation

MaxFlo VS 500 can be controlled in a wide variety of ways as described below:

1. MaxFlo VS 500 can operate by itself in Stand-Alone Mode using its built-in programmable timers.
2. MaxFlo VS 500 can also be controlled from third party controls (i.e. another manufacturer's control) and Hayward controls that are not software compatible using relay contacts. See section 5.3 for more information regarding connecting MaxFlo VS 500 and third party/non-software compatible Hayward controls.
3. MaxFlo VS 500 can communicate with and be controlled by Hayward pool and spa controls. See section 5.4 for more information regarding connecting MaxFlo VS 500 and Hayward pool and spa controls.

4.11. Digital Control Interface Orientation

The Digital Control Interface can be rotated to any of four desired positions after installation by loosening the two screws securing the user interface to the motor drive, lifting the user interface and rotating it to the desired position, and tightening the two screws in the new position. (**Figure 4.11-1**)

Figure 4.11-1

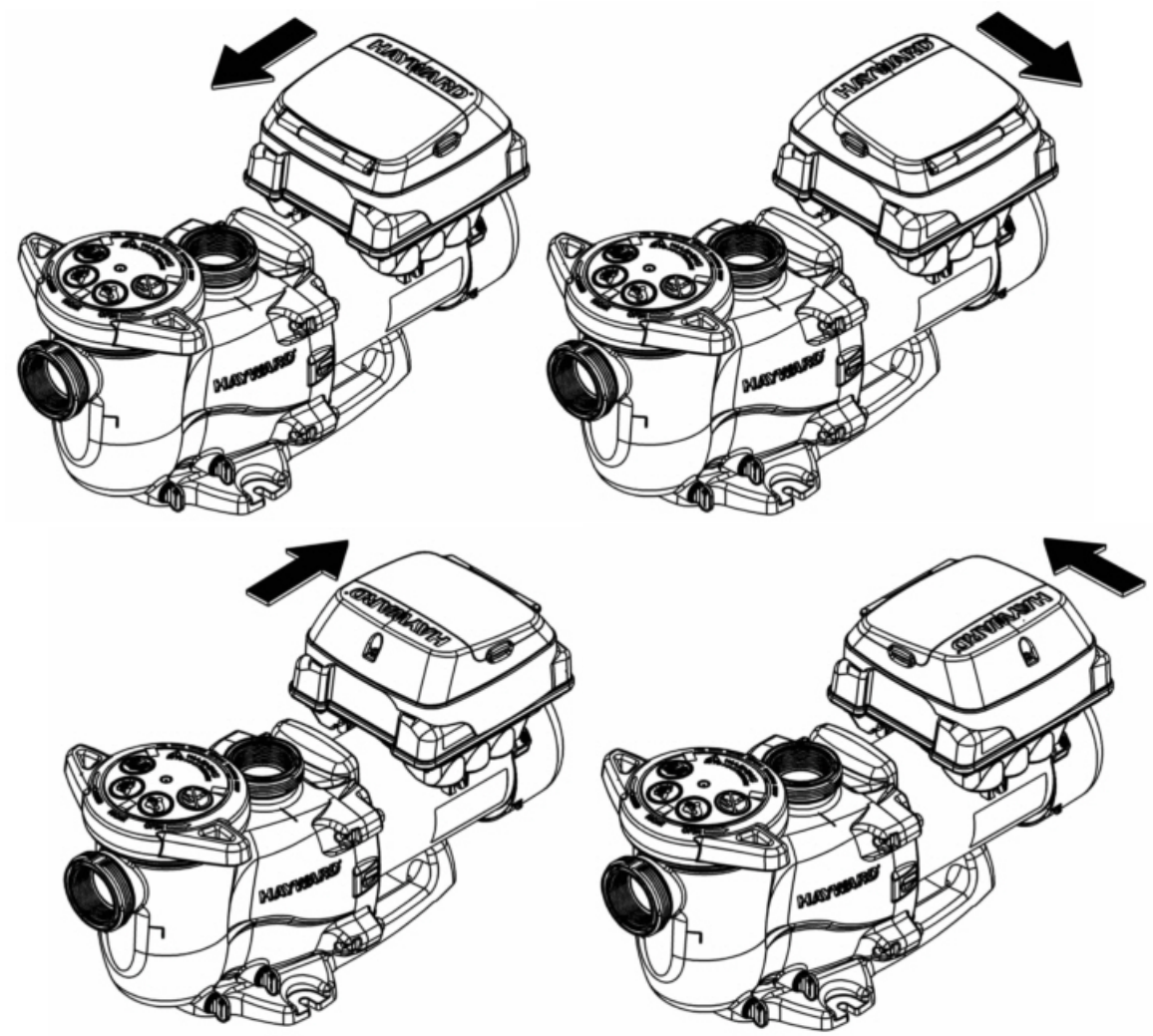

4.12. Interface Wall Mounting

The interface can also be wall mounted using the parts supplied in the optional wall mount kit using the following procedure.

1. **TURN OFF THE ELECTRICAL POWER AT THE CIRCUIT BREAKER.**
2. Loosen the two screws securing the user interface to the motor drive and remove the user interface. (Figure 4.12-1)
3. Disconnect the short cable that extends out from the motor drive to the user interface. (Figure 4.12-1)
4. Loosen the three screws securing the interface mounting plate to the motor drive and remove the interface mounting plate to gain access to the drive wiring compartment. (Figure 4.12-2)
5. Disconnect the short cable on the interface mounting plate from the RS485 terminal block on the drive PCB. Apply electrical tape to the exposed conductors. (Figure 4.12-2)
6. Mount the wall mount plate, SP3200DR10, in the desired location. (Figure 4.12-4)
7. Connect the interface cable as shown in the Wall Mounted Digital Control Interface Wiring diagram shown in section 5.2 to the motor drive RS485 terminal block and user interface PCB. Use multi-conductor, jacketed cable suitable for the installation location. The cable must be routed through the left side conduit opening on the motor drive and through the slot provided on the backside of the wall mount plate, SP3200DR10. Use a liquid tight cordgrip, appropriately sized for the cable being used, to seal the left side conduit opening. Cable used may be up to 500 feet in length. (Figure 4.12-4)
8. Mount the user interface to the wall mount plate, SP3200DR10, using the two screws. (Figure 4.12-4)
9. Reinstall the interface mounting plate, taking care to make sure it is properly aligned with the motor drive, and tighten the three screws to secure.
10. Install the blank cover, SP3200DR9, on the motor drive in the desired orientation. This cover is important to protect internal electronics. (Figure 4.12-3)
11. Apply power to the system and resume normal operation.

The following diagrams illustrate the interface wall mounting procedure.

Figure 4.12-1: Removing the Digital Control Interface for Wall Mounting

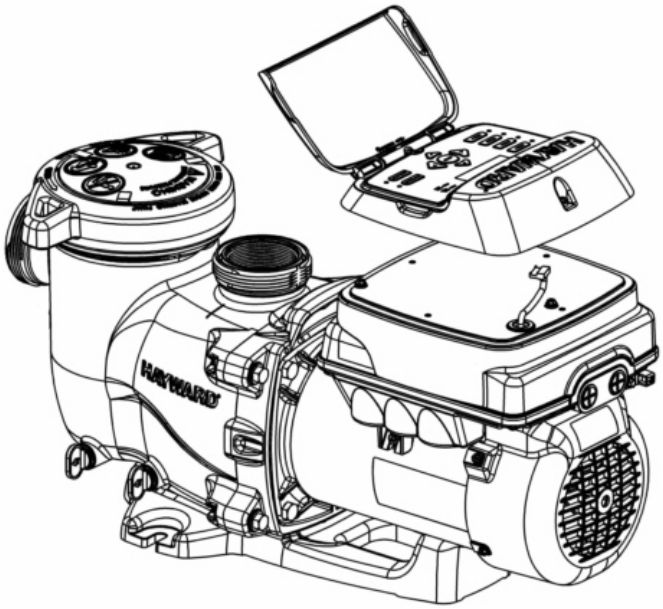

Figure 4.12-2: Removing the Interface Mounting Plate to access the Drive wiring compartment

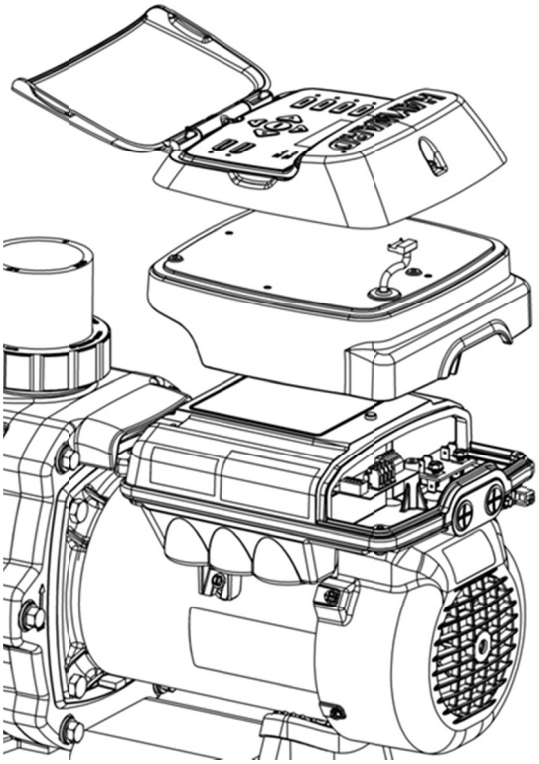

Figure 4.12-3: Adding the Blank Cover

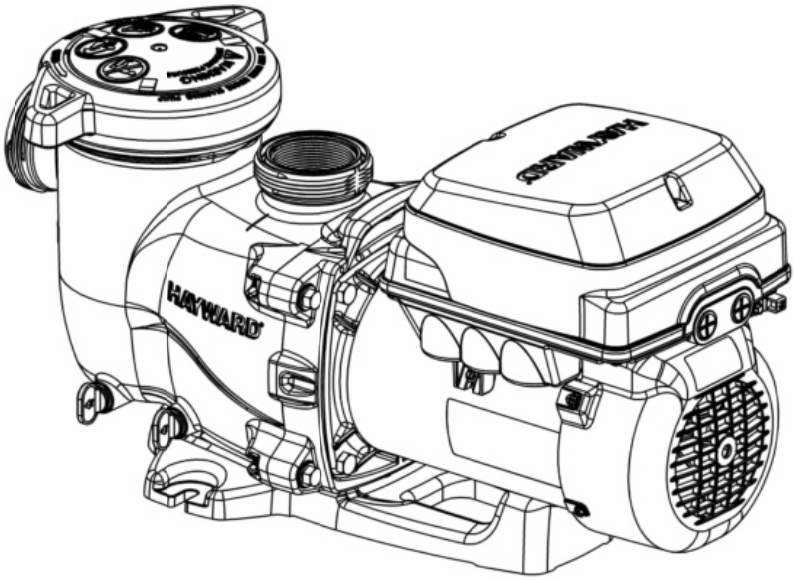

Figure 4.12-4: Wall Mounting the Interface

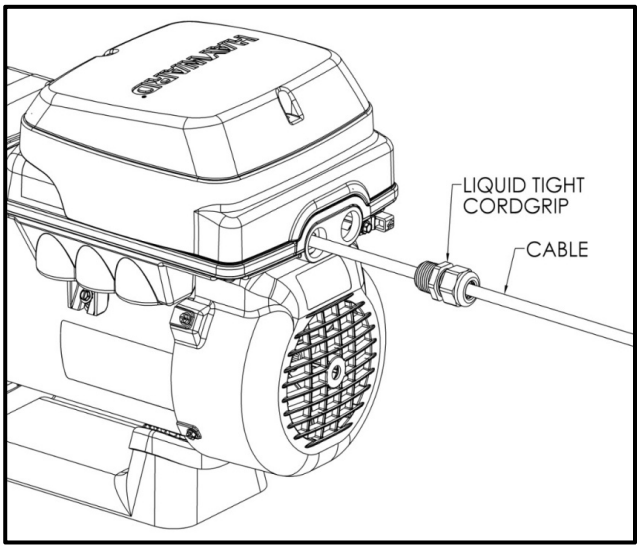

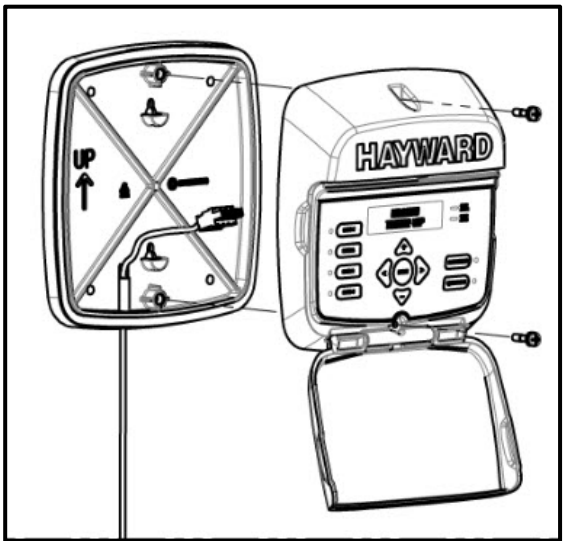

4.13. Installation Procedure

Please review sections 4.1 through 4.12 before continuing with this section.

1. **TURN OFF THE ELECTRICAL POWER AT THE CIRCUIT BREAKER AND REMOVE THE USER INTERFACE.**
2. Loosen the two screws securing the user interface to the motor drive and remove the user interface.
   - Disconnect the short cable that extends out from the motor drive to the user interface.
   - Loosen the three screws securing the interface mounting plate to the motor drive and remove the interface mounting plate to gain access to the drive wiring compartment.
   - Disconnect the short cable on the interface mounting plate from the RS485 terminal block on the drive PCB.
3. Connect 230VAC line power supply wiring to the terminals and ground screw as shown in the Input Power Wiring diagram. Wiring must be routed through the right side conduit opening. See section 5.1 for diagram.
4. If the pump will be controlled using a Hayward pool control, connect a two-conductor cable as shown in the Hayward Automation Control Wiring diagram. See section 5.4.
5. If the pump will be controlled using relay contacts from an external control, connect the digital input terminals to the relay contacts as shown in the External Relay Speed Control Wiring diagram. See section 5.3.
6. If the installation will use the remote stop feature of the drive, connect the digital input terminals to the remote stop switch as shown in the Remote Stop Wiring diagram. See section 5.5.
7. Wiring for remote control and/or remote stop functions must be routed through the left side conduit opening. Use a multi-conductor, jacketed cable suitable for the installation location. Use a liquid tight cordgrip, appropriately sized for the cable being used, to seal the left side conduit opening.
8. Connect the pump to the pool bonding system using 8AWG (6AWG for Canada) wire. A lug for bonding is provided on the outside of the drive enclosure.
9. After all electrical connections have been made, replace the interface mounting plate, taking care to make sure it is properly aligned with the motor drive, and tighten the three screws to secure.
   - Reconnect the short cable on the interface mounting plate to the RS485 terminal block on the drive PCB.
   - Reconnect the short cable that extends out from the motor drive to the user interface.
   - Mount the user interface to the interface mounting plate in the desired orientation.

   Note: The interface mounting plate/wiring compartment cover **must** be installed properly to provide environmental protection for the wiring compartment.
10. Apply power to the system, and proceed to "Configuration Menu", section 6.6, or see section 5.4 for details regarding Hayward automation control.

5. Wiring Diagrams

5.1. Input Power Wiring (Required)

Figure 5.1-1

DRIVE HIGH VOLTAGE CONNECTIONS

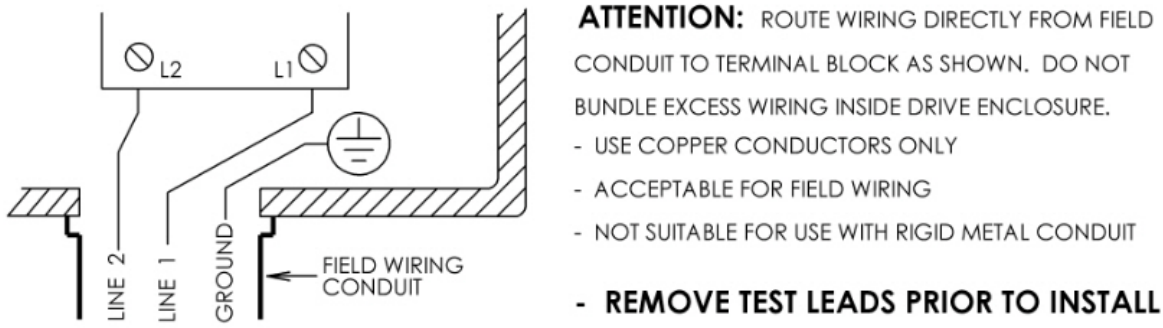

5.2. Wall Mounted Digital Control Interface Wiring (Optional)

Figure 5.2-1

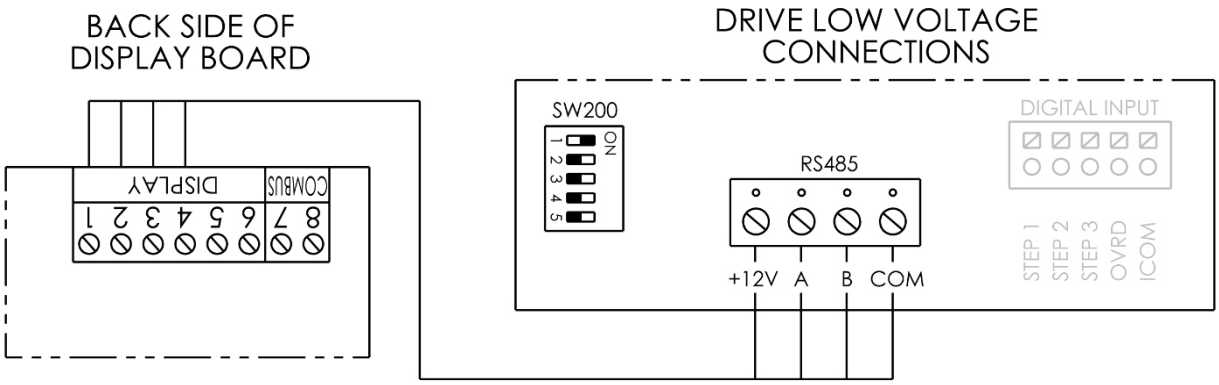

CONNECTIONS	
INTERFACE	RS485
1	COM
2	A
3	B
4	+12V

Connection wire must be rated for a minimum of 300V, and may be up to 500 feet in length. Use removable 4-position terminal block connectors for wiring connection to interface and motor drive PCB's taking care to note the wire colors and corresponding numbers next to the connectors. **Terminal block <u>must</u> be installed with screws facing up to ensure proper connection.** SW200 DIP switch #1 must be "ON".

5.3. External Relay Speed Control Wiring (Optional, for remote selection of pump speed)

Note: For third party controls and Hayward controls that are NOT software compatible.

Figure 5.3-1

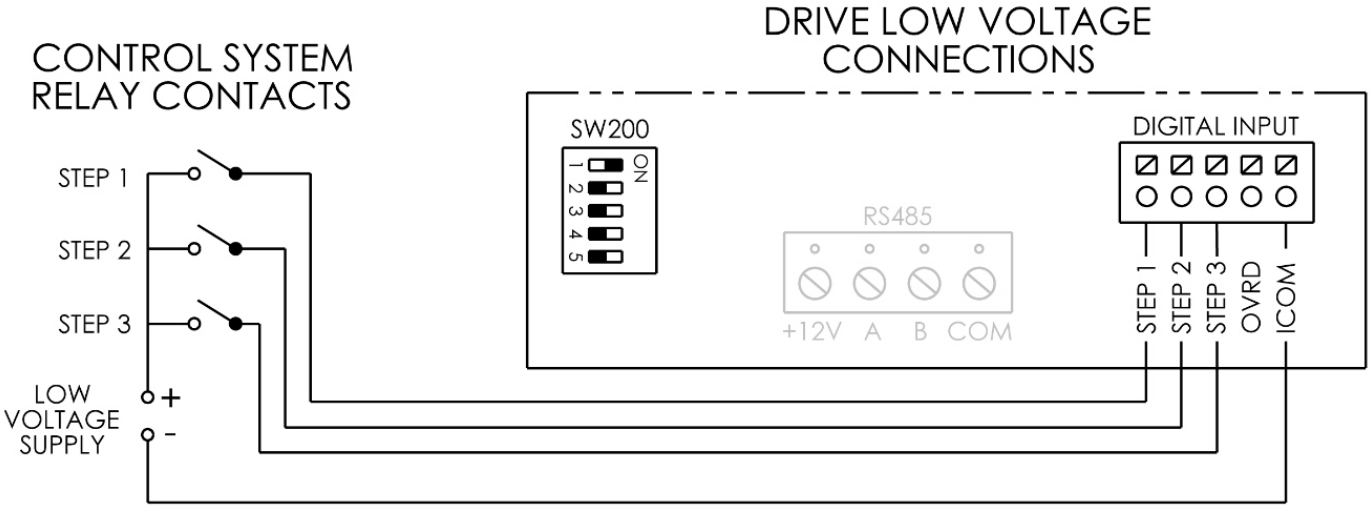

Connection wire must be rated for a minimum of 300V. Inputs are rated to accept a low voltage supply of 18-30VAC (24VAC+/-20%) or 9-30VDC (12/24VDC +/-20%). The "+12V" and "COM" terminals may be used as a low voltage supply, however, these terminals also supply power to the user interface, so care must be taken when connecting to these terminals to ensure proper operation of the user interface. SW200 DIP switch #1 must be "ON".

The MaxFlo VS 500 pump can be controlled from third party pool controls as well as Hayward controls that are not software compatible using relay contacts to select the speeds set in the Timer Menu (see section 6.7). In addition to this section you may also consult the applicable pool control installation manual for electrical connection details. Once installed, Remote Control Mode must be set to Relay Control in the pump Configuration Menu (see section 6.6). Preset Speeds 1-4 and Quick Clean are disabled when the pump is remotely controlled. When inputs STEP 1-3 are activated via the pool control relay contacts, timer speeds 1-8 are selected according to the following table (see section 6.7):

Timer Speed	STEP 1 Status	STEP 2 Status	STEP 3 Status
1	OFF	OFF	OFF
2	ON	OFF	OFF
3	OFF	ON	OFF
4	ON	ON	OFF
5	OFF	OFF	ON
6	ON	OFF	ON
7	OFF	ON	ON
8	ON	ON	ON

The number of speeds available depends on the number of auxiliary relays used as noted below:

1. Filter pump relay plus 1 auxiliary relays allows control of 2 speeds
2. Filter pump relay plus 2 auxiliary relays allows control of 4 speeds
3. Filter pump relay plus 3 auxiliary relays allows control of 8 speeds

5.4. Hayward Automation Control Wiring (Optional, for remote control of pump speed)

Note: For software compatible Hayward controls only. Existing user interface wiring connections must be removed from 4-position terminal block connector and must be covered/secured inside wiring compartments prior to making wiring connections shown below.

Figure 5.4 1

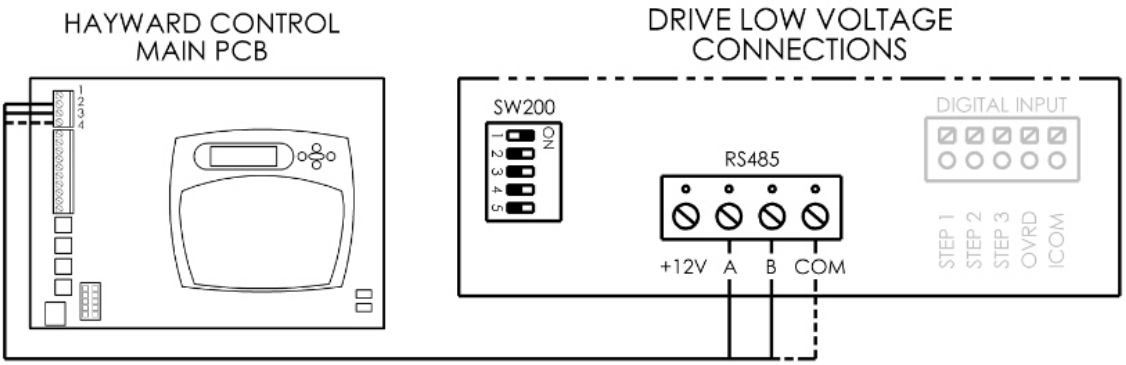

CONNECTIONS	
HAYWARD CONTROL	RS485
2	A
3	B

The MaxFlo VS 500 pump can communicate with and be controlled by Hayward pool controls such as OmniLogic™, ProLogic®, E-Command® 4, and OnCommand®. Minimum software revision requirements: OmniLogic R1.0.0, ProLogic 3.00, OnCommand 1.00, E-Command 2.65, E-Command 4 2.80, AquaLogic 2.65, and AquaPlus 2.65. To determine Hayward control software revision, consult the appropriate Hayward pool control installation manual or visit our website at www.haywardpool.com. Connection wire must be rated for a minimum of 300V, and may be up to 500 feet in length. Use removable 4-position terminal block connector for wiring connection to motor drive PCB, taking care to note the wire colors and corresponding numbers next to the connectors. **Terminal block must be installed with screws facing up to ensure proper connection.**

When communicating with OmniLogic, the HUA (Hayward Unique Address) is used for communication. For all Hayward controls other than OmniLogic, the pump address must be set using the SW200 DIP switch on the drive PCB. To determine which address should be used, consult the appropriate Hayward Pro Logic pool control installation manual, or visit our website at www.haywardpool.com. Pump addresses are set according to the table below.

Note: If communication issues are encountered, a third wire may be connected between terminal "4" at the pool control and terminal "COM" at the motor drive to help improve signal quality.

SW200 DIP SWITCH STATUS

PUMP ADDRESS	#1	#2	#3	#4	#5
Pool Filter	OFF	OFF	OFF	OFF	OFF
Aux 1 / Spa Filter	OFF	ON	OFF	OFF	OFF
Aux 2	OFF	OFF	ON	OFF	OFF
Aux 3	OFF	ON	ON	OFF	OFF
Aux 4	OFF	OFF	OFF	ON	OFF
Aux 5	OFF	ON	OFF	ON	OFF
Aux 6	OFF	OFF	ON	ON	OFF
Aux 7	OFF	ON	ON	ON	OFF
Aux 8	OFF	OFF	OFF	OFF	ON
Aux 9	OFF	ON	OFF	OFF	ON
Aux 10	OFF	OFF	ON	OFF	ON
Aux 11	OFF	ON	ON	OFF	ON
Aux 12	OFF	OFF	OFF	ON	ON
Aux 13	OFF	ON	OFF	ON	ON
Aux 14	OFF	OFF	ON	ON	ON
Lights Button	OFF	ON	ON	ON	ON

5.5. Remote Stop Switch Wiring (Optional)

Figure 5.5-1

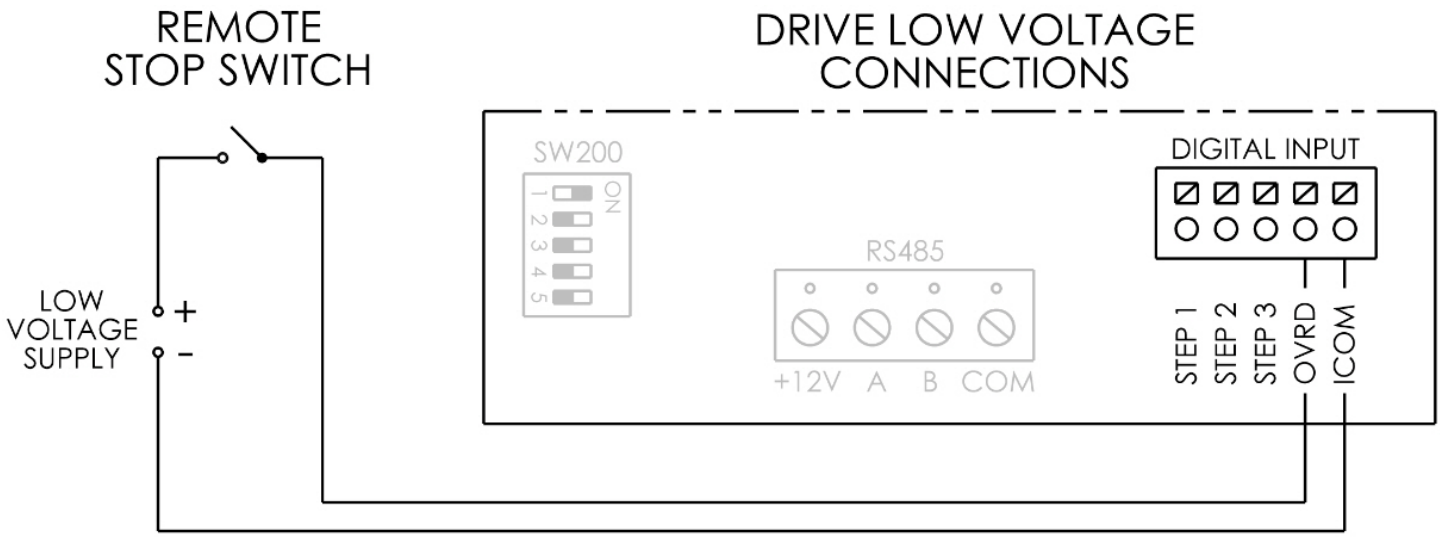

Connection wire must be rated for a minimum of 300V. Switch must be latching type; pump is stopped when circuit is closed. Inputs are rated to accept a low voltage supply of 18-30VAC (24VAC +/-20%) or 9-30VDC (12/24VDC +/-20%). The "+12V" and "COM" terminals may be used as a low voltage supply. These terminals also supply to the user interface, so care must be taken when connecting to these terminals to ensure proper operation of user interface. If Remote Stop is used when communicating with a Hayward pool control, if the "+12V" and "COM" terminals are used, the SW200 DIP switch #1 must be "ON".

6. Startup & Operation

6.1. Prior to Start-Up

If it is necessary to perform a water pressure test prior to initial use to ensure plumbing system is functioning properly, then the following criteria should be maintained for this test:

1. Have a professional perform this test.
2. Ensure all Hayward pump and system components are removed from system prior to performing test.

WARNING – If circulation equipment must remain in the plumbing system during water pressure test, do not apply more than 10 psi pressure to the system. Be sure water pressure has been released, using the filter manual air relief valve, before removing pump strainer cover.

WARNING – All suction and discharge valves MUST be OPEN, as well as filter air relief valve (if available) on filter, when starting the circulating pump system. Failure to do so could result in severe personal injury.

6.2. Starting/Priming the Pump

Refer to item #9 in section 6.6 for priming time selection.

Fill strainer housing with water to suction pipe level. If water leakage occurs from anywhere on the pump or filter, DO NOT start the pump. If no leakage occurs, stand at least 10 feet from pump and/or filter and proceed with starting the pump.

WARNING – Return to filter to close filter manual air relief valve when a steady stream of water (not air or air and water) is discharged from valve. Failure to do so could result in severe personal injury.

ATTENTION – NEVER OPERATE THE PUMP WITHOUT WATER. Water acts as a coolant and lubricant for the mechanical shaft seal. NEVER run pump dry. Running pump dry may damage seals, causing leakage, flooding, and voids warranty. Fill strainer housing with water before starting motor.

ATTENTION – Do NOT add chemicals to pool/spa system directly in front of pump suction. Adding undiluted chemicals may damage pump and voids warranty.

ATTENTION – Before removing strainer cover:

1. STOP PUMP before proceeding.
2. CLOSE VALVES in suction and outlet pipes.
3. RELEASE ALL PRESSURE from pump and piping system using filter manual air relief valve. See filter owner's manual for more details.
4. Remove strainer cover and fill strainer housing with water.
5. Clean and lubricate strainer cover O-ring with "Jack's 327" if necessary.
6. Replace strainer cover on strainer housing.
7. OPEN VALVES in suction and outlet pipes.

Note: Tighten strainer cover lock ring by hand only (no wrenches).

Turn on power and wait for pump to prime, which can take up to ten (10) minutes. Priming time will depend on vertical length of suction lift and horizontal length of suction pipe. If pump does NOT prime within 10 minutes, stop motor and determine cause. Be sure all suction and discharge valves are open when pump is running. See Troubleshooting Guide.

6.3. User Interface Summary

Figure 6.3-1

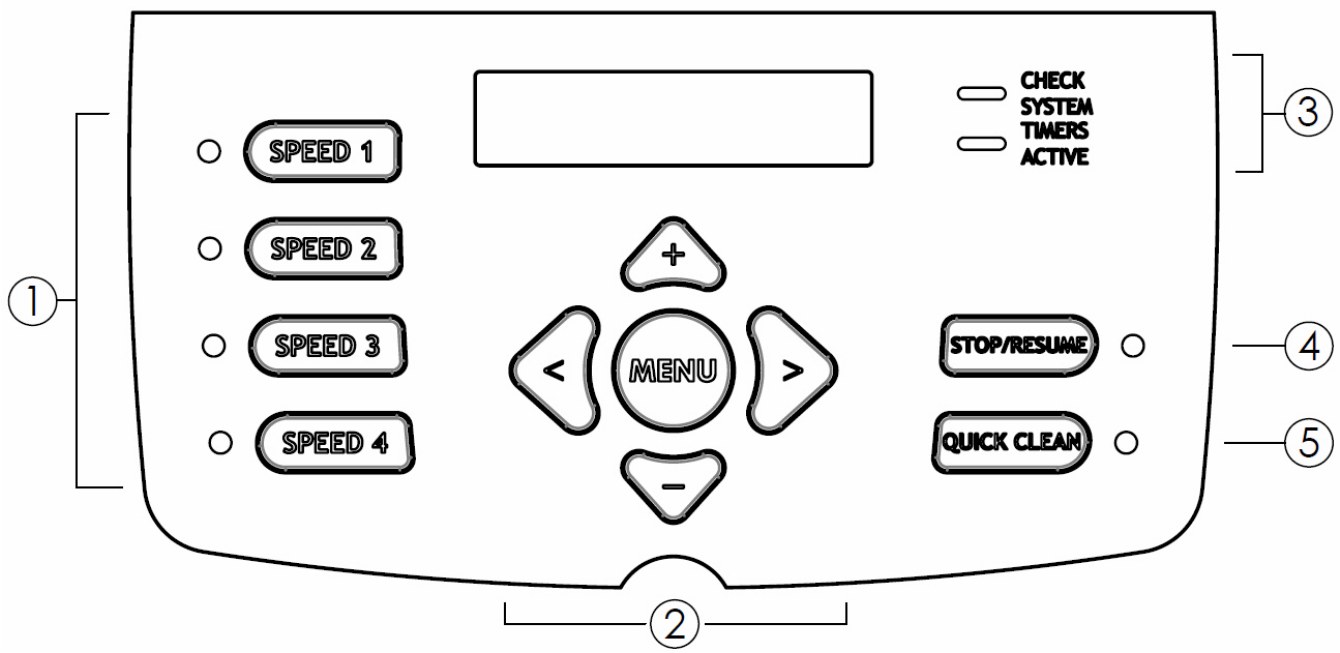

1. **Preset Speeds:** Buttons labeled SPEED 1 thru SPEED 4 can be used to run the pump at a predetermined speed for a certain length of time. Preset Speed settings can be quickly updated using the + and - arrow buttons to change the speed and then pressing the › button to save the new speed setting. When a speed is selected, the LED beside the button will illuminate to indicate operation.
   a. **Default Speeds:**
      - Speed 1: 1000 rpm
      - Speed 2: 1750 rpm
      - Speed 3: 2500 rpm
      - Speed 4: 3250 rpm

2. **Menu/navigation buttons:** The MENU button will scroll through the setup menus when pressed. The ‹ and › arrow buttons are used to move between displays and to select parameters to edit, and the + and - arrow buttons are used to change parameters.

3. **Status LEDs:** The CHECK SYSTEM LED will illuminate when the pump is experiencing an error condition. The TIMERS ACTIVE LED will illuminate once timers have been programmed to run the pump, even if the pump is not presently running.

4. **Stop/Resume:** This button is used to stop the pump to allow strainer basket cleaning, etc. When this button is pressed, the pump will remain stopped until the button is pressed a second time to resume normal operation. When the pump is stopped, the red LED beside the button will illuminate to indicate that the pump has been stopped.

5. **Quick Clean:** QUICK CLEAN is a mode intended for use when the pool will be cleaned with a suction side vacuum.

6.4. Menu Outline

1. **Configuration Menu** (see section 6.6 for basic product configuration)
   a. Set Day and Time
   b. Speed Selection
   c. MAX Allowed Speed
   d. MIN Allowed Speed
   e. Prime Duration
   f. Remote Control Mode
   g. Low Temp Operation
   h. Low Temp Setting
2. **Timer Menu** (see section 6.7 to program the 8 speeds with timer functions)
   a. Rename Timer "X" (where "X" equals 1 through 8)
   b. Pump Speed for Timer "X" (where "X" equals 1 through 8)
   c. Start/Stop Time for Timer "X" (where "X" equals 1 through 8)
   d. Choose Days for Timer "X" (where "X" equals 1 through 8)
3. **Preset Speed Setup Menu** (see section 6.8 to program the 4 preset speeds)
   a. Speed "X" Name (where "X" equals 1 through 4)
   b. Speed "X" Duration (where "X" equals 1 through 4)
   c. Speed "X" Speed (where "X" equals 1 through 4)
4. **Diagnostics Menu** (see section 6.9 to view product diagnostic information)
   a. Display Firmware Revision
   b. Drive Serial Number
   c. Motor Drive Firmware Revisions
   d. DC Bus Voltage Status
   e. Motor Current
   f. Power Usage
   g. Driver Temperature
   h. Event Log (if applicable)

6.5. Initial startup

After plumbing and wiring are complete, the variable speed drive must be configured prior to use. When power is applied to the drive for the first time, the following informational screens are displayed.

	Screen	Comments
1.	Hayward Variable Speed Pump	
2.	Thursday 1:27p 1725rpm 380 Watts	
3.	Timer 1 timer will end at 11:45p	

Note: Speeds can be selected at this time to temporarily run the pump, however, it is recommended that the drive configuration and timers be set according to individual installation site requirements (see section 6.7 for more details). At this point, pressing the MENU button will select the Configuration Menu.

6.6. Configuration Menu

	Screen	Buttons Used	Comments
1.	Configuration Menu Locked	‹ ›	Press & hold ‹ and › buttons for several seconds to unlock Configuration Menu
2.	Configuration Menu press > to enter	‹ ›	Use › to enter Configuration Menu
3.	Use + / - to adjust, > go to next item		
4.	Time: Th 1:27PM + change or > skip	+ - ‹ ›	Use + to change clock setting Use › if clock is correct
5.	Set Day and Time Thursday 1:27p	+ - ‹ ›	Adjust day/time setting Move to next selection, then to next menu item
6.	Speed Selection rpm	+ - ‹ ›	Select whether to display speed in rpm (Revolutions per Minute) or % of full speed Move to next menu item
7.	MAX allowed speed 3450 (600-3450rpm)	+ - ‹ ›	Set maximum running speed of pump Move to next menu item
8.	MIN allowed speed 600 (600-3450rpm)	+ - ‹ ›	Set minimum running speed of pump Move to next menu item
9.	Prime Duration 8:00 minutes	+ - ‹ ›	Select pump prime duration Move to next menu item

Note: User may set the pump to prime at the maximum allowed speed for 0-15 minutes in 30 second increments.

10.	Remote Control Mode Stand Alone	+ - ‹ ›	Select Stand Alone or Relay Control Move to next menu item

Note: See section 5.3 for more detail.

11.	Low Temp Operation Disabled	+ - ‹ ›	Enable or Disable Low Temp Operation Move to next menu item
12.	Low Temp Setting 4°C (39.2°F)	+ - ‹ ›	Set temperature to activate Low Temp Operation Move to next menu item

Note: When the pump is stopped and the ambient temperature drops below the operation temperature set point, the pump will prime and then run at the MAX allowed speed setting for 8 hours. Low temperature operation is *not* active when the pump is being remotely controlled. **Low temperature operation is NOT intended to protect the**

pump, system plumbing, or pool from freezing. If Low Temp Operation is disabled, the temperature setting screen is not shown.

	Screen	Buttons Used	Comments
13.	Reset all parameters + for yes; > to skip	+ - < >	Use + to reset to factory default settings Use > to skip reset
14.	Are you sure? + for yes; - for no	+ - < >	Confirm reset of all parameters Move to next menu item
15.	Use Timers Menu to set timeclocks.		

6.7. Timer Menu

	Screen	Buttons Used	Comments
1.	Timer Menu Press > to enter	< >	Use > to enter Timer Menu
2.	Timer 1 1725rpm 12:00a to 11:45p		
3.	Press + to change; Press > next timer	+ - < >	Use + to change displayed timer Use > to skip to next timer
4.	T1: Timer 1 +/- rename; speed >	+ - < >	Use + to rename timer Use > to set motor speed for timer
5.	Timer 1 1725rpm +/- adjust; times >	+ - < >	Use to set speed for timer Use > to set start/stop time
6.	Timer 1 1725rpm 8:00a to 6:00p	+ - < >	Use to set start/stop time for timer Use > to choose days of operation for timer
7.	Choose Days 7D 7 days a week >	+ - < >	Use to choose days of operation for timer Move to next menu item

Note: When start/stop times are set to be the same, the timer is deactivated. Each timer can be set to run on specific days of the week. Options are to run 7 days per week, 5 days per week (Monday thru Friday), or on a single day (Monday thru Sunday). Each timer is set up in this same manner. When the pump is powered and the timers are set up, the Timers Active LED will illuminate. If the timers are set up such that their run times overlap, the timers will run in priority from Timer 1 to Timer 8. In other words, if Timer 1 is set to run from 8:00 am to 12:00 pm, and Timer 2 is set to run from 10:00 am to 2:00 pm, the pump will run Timer 1 from 8:00 am to 12:00 pm, and will then switch to run Timer 2 until 2:00 pm. Default setting for Timer 1 is to start at 12:00 am, and end at 11:45 pm. When Remote Control Mode is set to Relay Control, the speed for Timer 1 may be set to 0 rpm to allow the pump to be stopped without having to remove power.

6.8. Preset Speed Setup Menu

	Screen	Buttons Used	Comments
1.	Speeds Menu Press > to enter	< >	Use › to enter Speeds Menu
2.	Speed 1 Name Speed 1	+ - < >	Use to rename displayed speed Move to next menu item
3.	Speed 1 Duration 0:30 hours	+ - < >	Use to set duration of speed Move to next menu item

Note: Each time a preset speed is selected, it will run for the programmed duration. Multiple presses of the speed button will add more time according to the set duration up to a maximum of 12 hours.

4.	Speed 1 Speed 1725 (600-3450rpm)	+ - < >	Use to set motor speed for displayed speed Move to next menu item

Note: Preset Speed settings can also be quickly updated without entering the Speeds Menu using the + and - arrow buttons to change the speed and then pressing the › button to save the new speed setting.

6.9. Diagnostic Menu

	Screen	Buttons Used	Comments
1.	Diagnostic Menu Press > to enter	< >	Use › to enter Diagnostic Menu and toggle between displays
2.	Display Revision 1.03		Displays firmware version of the display PCB.
3.	Drive Serial Number DET-3581200032		Displays motor drive serial number.
4.	Comm Rev: 2.15 Drv Rev: 2.00.oz		Displays firmware revisions of the motor drive and drive interface PCB's.
5.	DC Bus Voltage Within Range		Displays status of internal DC bus voltage.
6.	Motor Current 1.1A (8.5A Max)		Real-time display of motor input current.

	Screen	Buttons Used	Comments
7.	Power Usage 225W (1700W Max)		Real-time display of pump power usage.
8.	Drive Temperature 67°C (110°C Max)		Real-time display of motor driver temperature.
9.	Event log Press + to view	+ -	Use + to view event log

Note: For troubleshooting purposes, the Event Log will record the last twenty error/trip conditions and/or status messages, as well as the amount of time that has elapsed since the condition occurred. See section 11.2 for more detail.

6.10. Stop/Resume

	Screen
1.	Pump is stopped; press STOP/RESUME
2.	again to resume normal operation.

Note: When Stop/Resume is pressed at any time during normal operation, the above message will be displayed. The pump will stop within several seconds, and will remain stopped until Stop/Resume is pressed a second time, at which point the pump will resume normal operation.

6.11. Quick Clean

	Screen
1.	Quick Clean Quick Clean running
2.	Quick Clean 3450 rpm for 60 min;
3.	Quick Clean press resume to end.

Note: The above message will be displayed while Quick Clean is running. Quick Clean mode runs at the MAX allowed speed and expires after 60 min, and it may be cancelled early by pressing the Stop/Resume button, at which time the pump would return to normal operation.

6.12. Remote Stop

Screen

1.

```
Remote Stop
is engaged
```

Note: The above message will be displayed when an installed remote stop switch is activated. For either model, the pump will remain stopped until the remote stop switch is deactivated. See section 5.5 for more detail.

7. Maintenance

- Clean strainer basket regularly. Do NOT strike basket to clean. Inspect strainer cover gasket regularly and replace as necessary.
- Hayward pumps have self-lubricating motor bearings and shaft seals. No lubrication is necessary.
- Keep motor clean. Insure motor air vents are free from obstruction to avoid damage. Do NOT use water to hose off motor.
- Occasionally, shaft seals must be replaced, due to wear or damage. Replace with genuine Hayward seal assembly kit. See "Shaft Seal Change Instructions" in this manual.

8. Storage / Winterization

WARNING – Separation Hazard. Do not purge the system with compressed air. Purging the system with compressed air can cause components to explode, with risk of severe injury or death to anyone nearby. Use only a low pressure (below 5 PSI), high volume blower when air purging the pump, filter, or piping.

ATTENTION – Allowing the pump to freeze with water in it will void the warranty.

ATTENTION – Use ONLY propylene glycol as antifreeze in your pool/spa system. Propylene glycol is non-toxic and will not damage plastic system components; other anti-freezes are highly toxic and may damage plastic components in the system.

Drain all water from pump and piping when expecting freezing temperatures or when storing pump for a long time (see instructions below). Gravity drain system as far as possible.

Keep motor dry and covered during storage. To avoid condensation/corrosion problems, do NOT cover or wrap pump with plastic film or bags.

8.1. Storing Pump For Winterization

WARNING – To avoid dangerous or fatal electrical shock hazard, turn OFF power to motor before draining pump. Failure to disconnect power may result in serious personal injury or death.

1. Drain water level below all inlets to the pool.
2. Remove drain plugs and strainer cover from strainer housing. (See "Parts Diagram" in section 10.1 of this manual for pump component locations.)
3. Disconnect pump from mounting pad, wiring (after power has been turned OFF), and piping.
4. Once the pump is fully drained of water, re-install the strainer cover and drain plugs. Store pump in a dry area.

9. Shaft Seal Change Instructions

IMPORTANT SAFETY INSTRUCTIONS
PLEASE READ AND FOLLOW ALL INSTRUCTIONS

When servicing electrical equipment, basic safety precautions should always be observed including the following. Failure to follow instructions may result in injury.

- ⚠ **WARNING** – To reduce risk of injury, do not permit children to use this product.
- Disconnect all electrical power service to pump before beginning shaft seal replacement.
- Only qualified personnel should attempt rotary seal replacement. Contact your local authorized Hayward Dealer or service center if you have any questions.
- Refer to **Figure 10.1-1** for pump component locations.

Exercise extreme care in handling both the rotating and the stationary sections of the two-part replacement seal. Foreign matter or improper handling will easily scratch the graphite and ceramic sealing surfaces.

9.1. Removing the Motor Assembly

1. Remove the four (4) 5/16" x 1.75" hex head bolts, which hold the motor assembly to the pump/strainer housing, using a 1/2" wrench or socket.
2. Slide the motor assembly out of the pump/strainer housing, exposing the diffuser. Remove the three (3) diffuser screws and pull the diffuser off of the seal plate to expose the impeller.

9.2. Removing the Impeller

3. To prevent the motor shaft from turning, secure using a 5/16” hex wrench on the motor shaft through the fan shroud on the back of the pump.
4. Remove the impeller by rotating counterclockwise.

9.3. Removing the Ceramic Seat

5. Remove the spring seal assembly and seal plate from the motor by removing the four (4) 3/8” x 1” bolts that secure it to the motor, using a 9/16” wrench or socket.
6. Press the ceramic seat with rubber cup out of the seal plate. If tight, use a small screwdriver to tap seal out.

STOP - Clean all recesses & parts to be reassembled. Inspect gaskets & replace if necessary.

9.4. Seal Installation

7. Clean and lightly lubricate the motor shaft and seal recesses in the seal plate with a dilute solution of non-granulated liquid-type soap. Gently wipe the polished face of the ceramic seal with a soft cotton cloth. Lubricate the rubber cup on the ceramic seat and press it firmly into the recess of the seal plate, with the polished ceramic surface facing out.
8. Reassemble the motor to the seal plate using the four (4) 3/8” x 1” bolts. Torque the bolts to 100 in-lbs.
9. Gently wipe the black, polished surface of the spring seal assembly with a soft cotton cloth.
10. Press the spring seal assembly onto the motor shaft, with the black polished surface facing the ceramic seat.

9.5. Replacing the Impeller and Diffuser

11. Screw the impeller onto the motor shaft in a clockwise direction. Tighten snugly by holding motor shaft with wrench as noted in step #3.
12. Place the diffuser over the impeller and onto the seal plate, aligning the three (3) pins with the matching holes in the seal plate. Note: Flat side of diffuser rim will face up. Replace the three (3) diffuser screws and torque to 20 in-lbs.

9.6. Replacing the Motor Assembly

13. Slide the motor assembly, with the diffuser in place, into pump/strainer housing, being careful not to disturb the diffuser gasket.
14. Fasten assembly to pump/strainer housing using the four (4) 5/16" x 1.75" bolts. (Be sure housing gasket is in place, and lubricated. Replace if damaged). Tighten bolts alternately and evenly to 185 inch-pounds. Looking at the back of the pump, start with the top right, move diagonal to the bottom left, then up to the top left and last across to the bottom right.

10. Replacement Parts

10.1. Parts Diagram

Figure 10.1-1

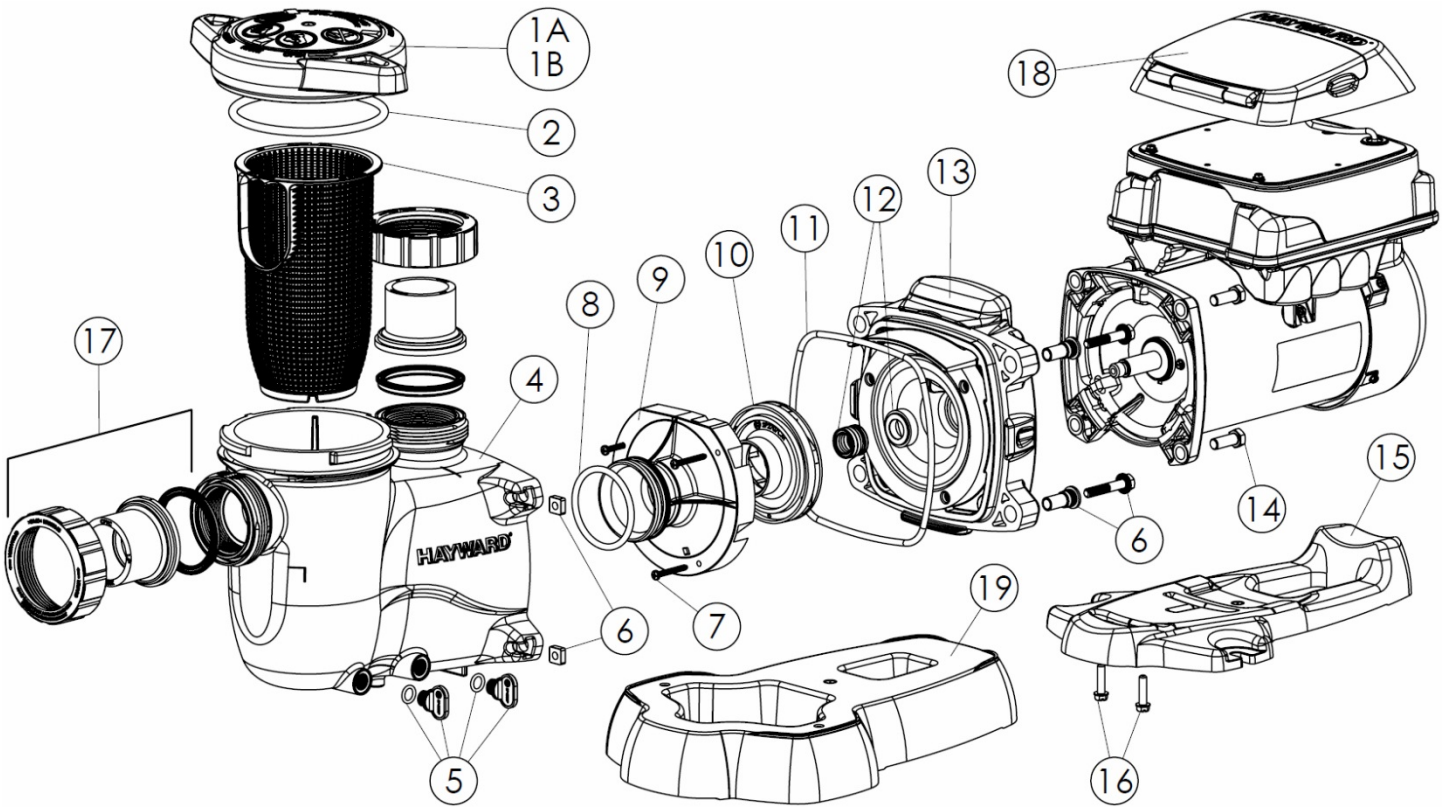

10.2. Parts Listing

Ref. No.	Part No.	Description	Qty.
1A	SPX2300DLS	Strainer Cover Kit (Includes Strainer Cover, Lock-Ring, O-Ring)	1
1B	SPX2300DLSB	Strainer Cover Kit for Biguanide Sanitizers (Includes Strainer Cover, Lock-Ring, O-Ring) NOT Pressure Testable	1
2	SPX2300Z4	Strainer Cover O-Ring	1
3	SPX2300M	Strainer Basket	1
4	SPX2300AA	Pump Strainer Housing with Drain Plugs	1
5	SPX4000FG	Drain Plug with O-Ring	2
6	SPX2700ZPAK	Hardware Pack (Includes 4 Housing Bolts, Seal-Plate Spacers & Square Nuts	1
7	SPX2300Z3PAK3	Diffuser Screws (3 Pack)	1
8	SX220Z2	Diffuser O-Ring	1
9	SPX2300B	Diffuser	1
10	SPX2710CM	Impeller	1
11	GMX600F	Housing O-Ring	1
12	SPX2700SAV	Shaft Seal Assembly, viton	1
13	SPX2300E	Seal Plate	1
14	SPX3200Z5PAK4	Motor Bolt (4 Pack)	1
15	SPX2300G	Motor Support with Base Mount Screws	1
16	SPX1600Z52	Motor Support Base Mount Screws	1
17	SPX2700UNKIT	Union Connector Kit (Includes 2 Nuts, Connectors, Gaskets)	1
18	SPX3400DR4	Motor Drive Display Cover (Cover only)	1
-	SPX3200LCD	Digital Control interface assembly	1
-	SPX3400DRKIT	Wall Mount Kit	1
	OPTIONAL		
19	SPX2300GR	Optional Riser Base Aligns with Sta-Rite® Dyna-Pro®	1
	POWER END		
	SPX2303Z1VSPE	Power end assembly, (includes parts #7-14, motor and drive)	1

* WHISPERFLO is a registered trademark of Pentair Aquatic Systems, which is used herein for identification purposes only. This is a retrofit base for existing WHISPERFLO pump installations. Pentair Aquatic Systems is not affiliated with Hayward Pool Products.

11. Troubleshooting

11.1. General Problems

- **Motor Will NOT Start:**
  1. Make sure the terminal board connections agree with the wiring diagram on the pump data plate label.
  2. Be sure the pump is wired for the available field supply voltage (230VAC).
  3. Check for and correct any improper or loose wiring connections; open switches or relays; tripped circuit breakers, or blown fuses.
  4. Manually check the rotation of the motor shaft for free movement and lack of obstruction. Correct if necessary.

- **Motor Shuts OFF:**
  1. Check for low voltage or power drop at the motor (frequently caused by undersized wiring). Contact a qualified professional to verify the electrical connections.

- **Motor Hums, But Does NOT Start:**
  1. Impeller jammed with debris. Have a qualified repair professional open the pump and remove the debris.

- **Pump Won't Prime:**
  1. Empty pump/strainer housing. Make sure the pump/strainer housing is filled with water and the cover o-ring is clean. Ensure the o-ring is properly seated in the cover o-ring groove. Ensure the o-ring sealing surface is lubricated with "Jack's 327" and that the strainer cover is locked firmly in position. Lubricant will help to create a tighter seal.
  2. Loose connections on the suction side. Tighten the pipe/union connections.
     Note: Any self-priming pump will not prime if there are suction air leaks. Leaks will result in bubbles emanating from the return fittings on the pool wall.
  3. Leaking O-ring or packing glands on valves. Tighten, repair, or replace the valves.
  4. Strainer basket or skimmer basket loaded with debris. Remove the strainer housing cover or the skimmer cover. Clean the basket, and refill the strainer housing with water. Tighten the cover.
  5. Suction side clogged. Contact a qualified repair professional. You should have 5" - 6" of vacuum at the strainer cover (your pool dealer can confirm this with a vacuum gauge). You may be able to check by removing the skimmer basket and holding an object over the bottom port with the skimmer full and the pump running. If no suction is felt, check for line blockage.
     a. If the pump develops a vacuum, check for a blocked suction line or a dirty strainer basket. An air leak in the suction piping may be the cause.
     b. If the pump does not develop a vacuum and the pump has sufficient "priming water":
        i. Re-check the strainer housing cover and all threaded connections for suction leaks. Check if all system hose clamps are tight.
        ii. Check voltage to ensure that the motor is rotating at full rpm's.
        iii. Open the housing cover and check for clogging or obstruction in suction. Check the impeller for debris.
        iv. Remove and replace the shaft seal only if it is leaking.

- **Low Flow – Generally:**
  1. Clogged or restricted strainer or suction line. Contact a qualified repair professional.
  2. Undersized pool piping. Correct the piping size.
  3. Plugged or restricted discharge line of filter, valve partially closed (high gauge reading). Sand filters – backwash as per manufacturer's instructions; D.E. filters – backwash as per manufacturer's instructions; Cartridge filters – clean or replace the cartridge.
  4. Air leak in suction (bubbles issuing from return fittings). Re-tighten the suction and discharge connections using PTFE tape. Inspect other plumbing connections, and tighten as required.
  5. Plugged, restricted, or damaged impeller. Replace the impeller including a new seal assembly.

- **Noisy Pump:**
  1. Air leak in suction piping, cavitations caused by restricted or undersized suction line or leak at any joint, low water level in pool, and unrestricted discharge return lines. Correct the suction condition or throttle return lines, if practical. Holding your hand over the return fitting will sometimes prove this, or by putting in a smaller eyeball fitting.
  2. Vibration due to improper mounting, etc. Mount the pump on a level surface and secure the pump to the equipment pad.
  3. Foreign matter in the pump housing. Loose stones/debris hitting the impeller could be the cause. Clean the pump housing.
  4. Motor bearings noisy from normal wear, rust, overheating, or concentration of chemicals causing seal damage, which will allow chlorinated water to seep into bearings wiping out the grease causing bearing to whine. All seal leaks should be replaced at once.

- **Interference With Home Automation/Power Line Communication Equipment:**
  1. Make sure the terminal board connections agree with the wiring diagram on the pump data plate label.
  2. Check for and correct any improper or loose wiring connections.
  3. Install noise filter (from home automation/power line communication equipment vendor) to prevent equipment interference.

11.2. Check System Messages

Code	Troubleshooting
Check System DC voltage too high	Indicates that the DC bus voltage has risen above 400 VDC. Verify that line voltage is within 10% (207-253 VAC) of pump rated voltage at the terminal block.
Check System DC voltage too low	Indicates that the DC bus voltage has dropped below 230 VDC. Verify that line voltage is within 10% (207-253 VAC) of pump rated voltage at the terminal block. Also, verify that power supply connections are properly made at the circuit breaker as well as at the terminal block.
Check System Drive is overheated	Indicates that the internal components of the drive have become overheated. Motor airflow path should be checked for obstructions and cleared if present. Check ambient temperature and verify against motor nameplate (50°C/122°F).
Check System Drive overload	Indicates that motor current is too high. Check impeller, diffuser, shaft seal, and motor for any issues or binding.
Check System Pump failed to start	Indicates that the drive was not able to start the motor. Check impeller, diffuser, shaft seal, and motor for any issues or binding.
Check System Motor phase lost	Indicates that one of the motor phases is open and that the motor/drive may need to be replaced. Contact Hayward Technical Service for additional assistance.
Check System Processor failed	Indicates that there is a problem with the processor in the motor/drive, and that the motor/drive may need to be replaced. Contact Hayward Technical Service for additional assistance.
Check System Communication failed	Indicates that there are communication problems between the user interface and motor/drive. Connections between the user interface and motor/drive should be verified.
Check System Memory failed	Indicates that the drive memory has been damaged or corrupted, and that the motor/drive may need to be replaced. Contact Hayward Technical Service for additional assistance.
Check System Drive comm failed	Indicates that there are communication problems inside the motor/drive, and that the motor/drive may need to be replaced. Contact Hayward Technical Service for additional assistance.
Check System Error code XX	Indicates that the user interface is receiving an error from the motor/drive that it does not understand. Contact Hayward Technical Service for additional assistance.

Note: All errors can be manually reset by pressing Stop/Resume when the error message is shown, or by cycling power applied to the pump after the error has occurred. Under certain circumstances, the "Drive overload" error can only be reset by cycling power applied to the pump. If the troubleshooting steps listed above do not help to resolve the error condition, then the problem may be internal to the motor/drive. Contact Hayward Technical Service at (908) 355-7995 for additional assistance.

12. Warranty

HAYWARD® LIMITED WARRANTY

To Buyer, as original purchaser of this equipment, Hayward Pool Products, 620 Division Street, Elizabeth, New Jersey, warrants its products free from defects in materials and workmanship for a period of THREE (3) years from date of purchase.

Parts which fail or become defective during the warranty period, except as a result of freezing, negligence, improper installation, use, or care, shall be repaired or replaced, at our option, without charge, within 90 days of the receipt of defective product, barring unforeseen delays.

To obtain warranty replacements or repair, defective components or parts should be returned, transportation paid, to the place of purchase, or to the nearest authorized Hayward service center. For further Hayward dealer or service center information, contact Hayward customer service department. No returns may be made directly to the factory without the express written authorization of Hayward Pool Products.

To original purchasers of this equipment, Hayward Pool Products warrants its products to be free from defects in materials and workmanship for a period of THREE (3) years from the date of purchase.

Filters which become defective during the warranty period, except as a result of freezing, negligence, improper installation, use or care, shall be repaired or replaced, at our option, without charge.

All other conditions and terms of the standard warranty apply.

Hayward shall not be responsible for cartage, removal and/or reinstallation labor or any other such costs incurred in obtaining warranty replacements.

The Hayward Pool Products warranty does not apply to components manufactured by others. For such products, the warranty established by the respective manufacturer will apply.

Some states do not allow a limitation on how long an implied warranty lasts, or the exclusion or limitation of incidental or consequential damages, so the above limitation or exclusion may not apply to you.

This warranty gives you specific legal rights, and you may also have other rights, which vary from state to state.

Hayward Pool Products
620 Division Street
Elizabeth, NJ 07207

*** Supersedes all previous publications.**

13. Product Registration

DATE OF INSTALLATION _____

INITIAL PRESSURE GAUGE READING (CLEAN FILTER) _____

PUMP MODEL _____

***Retain this Warranty Certificate in a safe and convenient location for your records**

THIS PAGE INTENTIONALLY LEFT BLANK

THIS PAGE INTENTIONALLY LEFT BLANK

FCC Compliance Statement:

This device complies with part 15 of the FCC rules. Operation is subjected to the following two conditions: (1) This device may not cause harmful interference, and (2) this device must accept any interference received, including interference that may cause undesired operation.

This equipment has been tested and found to comply with limits for a Class B digital device, pursuant to Part 15 of the FCC rules. These limits are designed to provide reasonable protection against harmful interference in residential installations. This equipment generates, uses, and can radiate radio frequency energy, and if not installed and used in accordance with the instructions, may cause harmful interference to radio communications.
However, there is no guarantee that interference will not occur in a particular installation. If this equipment does cause interference to radio or television equipment reception, which can be determined by turning the equipment off and on, the user is encouraged to try to correct the interference by one of more of the following measures:
- Reorient or relocate the receiving antenna.
- Move the equipment away from the receiver.
- Plug the equipment into an outlet on a circuit different from that to which the receiver is connected.
- Consult the dealer or an experienced radio/television technician for additional suggestions.

DETACH HERE: Fill out bottom portion completely and mail within 10 days of purchase/installation or register online.

MaxFlo VS™ 500 Pump

Warranty Card Registration

Please Print Clearly:

First Name_____ **Last Name**_____

Street Address_____

City_____ **State**_____ **Zip**_____

Phone Number_____ **Purchase Date**_____

E-Mail Address_____

Serial Number																

(10-17 digit number)

Model Number_____

Pool Capacity_____(U.S. Gallons)

☐Please include me on all e-mail communications regarding Hayward Equipment or promotions.

<u>Mail to:</u> Hayward Pool Products, 620 Division Street, Elizabeth, NJ 07207
<u>Attn:</u> Warranty Dept
Or REGISTER YOUR WARRANTY ON-LINE AT WWW.HAYWARD.COM

Years Pool has been in service
☐ < 1 year ☐ 1-3 ☐ 4-5 ☐ 6-10 ☐11-15 ☐ >15

Purchased from_____
☐Builder ☐Retailer ☐Pool Service ☐Internet/Catalog

Company Name_____

Address_____

City_____ State_____ Zip_____

Phone_____

Type of Pool:
☐ Concrete/Gunite ☐ Vinyl ☐ Fiberglass
☐ Other_____

☐ New Installation ☐ Replacement

Installation for:
☐ In Ground ☐ Spa

HAYWARD and MaxFlo VS 500 are registered trademarks of Hayward Industries, Inc.
©2017 Hayward Industries. All rights reserved.