PENTAIR POOL

CLEAN & CLEAR® CARTRIDGE FILTER
INSTALLATION AND USER GUIDE

IMPORTANT SAFETY INSTRUCTIONS
READ AND FOLLOW ALL INSTRUCTIONS
SAVE THESE INSTRUCTIONS

SECTION I. FILTER INSTALLATION 1
SECTION II. FILTER OPERATION 2
SECTION III. TROUBLESHOOTING 6
SECTION IV. TECHNICAL DATA 7
A. Filter Pressure Loss Chart 7
C. Replacement Parts 7
B. Flow Rate Table 7

⚠WARNING

Before installing this product, read and follow all warning notices and instructions accompanying this filter. Failure to follow safety warnings and instructions can result in severe injury, death, or property damage. Call (800) 831-7133 for additional free copies of these instructions.

Important Notice

This manual contains important information about the installation, operation and safe use of this product. This information should be given to the owner/operator of this equipment.

SECTION I. FILTER INSTALLATION

A. GENERAL INFORMATION

1. The filter should be mounted on a level concrete slab. Position the filter so that the instructions, warnings and pressure gauge are easily visible. Also, position the filter so that the plumbing connections, control valve, and drain port are accessible for servicing and winterizing.
2. Install electrical controls (e.g., on/off switches, timers, control systems, etc.) at least 5 feet from the filter. This will allow you enough room to stand clear of the filter during start up.
3. Provide sufficient clearance around the filter to permit visual inspection of the clamp. Refer to Figure 1.
4. Provide sufficient clearance above the filter to remove the filter lid for cleaning and servicing. Required clearance will vary based on filter model. Refer to Table 1 on next page.

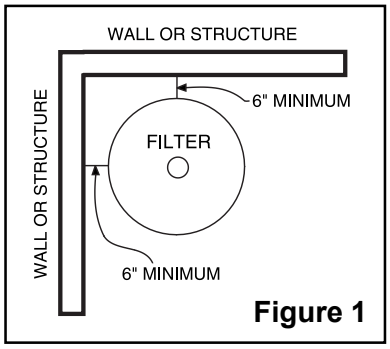

Figure 1

⚠WARNING

Risk of electrical shock or electrocution. Position the filter and High Flow™ manual air relief valve to safely direct water drainage and purged air or water. Water discharged from an improperly positioned filter or valve can create an electrical hazard that can cause severe personal injury as well as damage property.

5. When installing the High Flow™ manual air relief valve use the O-ring only, there is no need for thread sealing compounds. Position the filter to safely direct water drainage. Rotate the valve to safely direct purged air or water. Water discharged from an improperly positioned filter or valve can create an electrical hazard as well as damage property.

TABLE 1.

Model	P/N	Size	Vertical Clearance Req.
CC50	160314	50 sq. ft.	30 in.
CC75	160315	75 sq. ft.	39 in.
CC100	160316	100 sq. ft.	61 in.
CC150	160317	150 sq. ft.	76 in.
CC200	160318	200 sq. ft.	76 in.

6. Make all plumbing connections in accordance with local plumbing and building codes. Filter plumbing connections are provided with an O-ring seal. Use only a silicone base lubricant on the O-rings. Do not use pipe joint compound, glue or solvent on the bulkhead connections.
7. The base of this filter is provided with two (2) mounting bosses for the purpose of anchoring the filter to the concrete.
8. The maximum working pressure of this filter is 50 psi. Never subject this filter to pressure in excess of this amount, even when conducting hydrostatic pressure tests. Pressures above 50 psi can cause the lid to be blown off, which can result in severe injury, death or property damage.

   When performing hydrostatic pressure tests or when testing for external leaks of the completed filtration and plumbing system, ensure that the Maximum Pressure that the filtration system will be subjected to DOES NOT EXCEED THE MAXIMUM WORKING PRESSURE OF ANY OF THE COMPONENTS CONTAINED WITHIN THE SYSTEM. In most cases, the maximum pressure will be stated on each component of the system.

   If doubt exists as to the pressure to which the system will be subjected, install an ASME approved automatic Pressure Relief or Pressure Regulator in the circulation system for the lowest working pressure of any of the components in the system.

SECTION II. FILTER OPERATION

⚠WARNING

THIS FILTER OPERATES UNDER HIGH PRESSURE. WHEN ANY PART OF THE CIRCULATING SYSTEM (e.g., LOCK RING, PUMP, FILTER, VALVES, ETC.) IS SERVICED, AIR CAN ENTER THE SYSTEM AND BECOME PRESSURIZED. PRESSURIZED AIR CAN CAUSE THE LID TO BLOW OFF WHICH CAN RESULT IN SEVERE INJURY, DEATH, OR PROPERTY DAMAGE. TO AVOID THIS POTENTIAL HAZARD, FOLLOW THESE INSTRUCTIONS.

1. BEFORE REPOSITIONING VALVES AND BEFORE BEGINNING THE ASSEMBLY, DISASSEMBLY, OR ADJUSTMENT OF THE LOCK RING OR ANY OTHER SERVICE OF THE CIRCULATING SYSTEM: (A) TURN THE PUMP OFF AND SHUT OFF ANY AUTOMATIC CONTROLS TO ASSURE THE SYSTEM IS NOT INADVERTENTLY STARTED DURING THE SERVICING; (B) OPEN AIR RELIEF VALVE; AND (C) WAIT UNTIL ALL PRESSURE IS RELIEVED -PRESSURE GAUGE MUST READ ZERO (0).
2. WHENEVER INSTALLING THE FILTER LOCK RING, FOLLOW THE **FILTER LOCK RING INSTALLATION INSTRUCTIONS EXACTLY**.
3. ONCE SERVICE ON THE CIRCULATING SYSTEM IS COMPLETE, FOLLOW **SYSTEM RESTART INSTRUCTIONS EXACTLY.**
4. MAINTAIN CIRCULATION SYSTEM PROPERLY. REPLACE WORN OR DAMAGED PARTS IMMEDIATELY (e.g., lock ring, pressure gauge, relief valve, O-rings, etc.)
5. BE SURE THAT THE FILTER IS PROPERLY MOUNTED AND POSITIONED ACCORDING TO THE INSTRUCTIONS PROVIDED.

A. GENERAL INFORMATION

1. This filter operates under pressure. When the lock ring is installed properly and operated without air in the water system, this filter will operate in a safe manner.
2. The maximum working pressure of this filter is 50 psi. Never subject this filter to pressure in excess of this amount - even when conducting hydrostatic pressure tests. Pressures above 50 psi can cause the lid to be blown off, which can result in severe injury, death or property damage.

   When performing hydrostatic pressure tests or when testing for external leaks of the completed filtration and plumbing system, ensure that the Maximum Pressure that the filtration system will be subjected to DOES NOT EXCEED THE MAXIMUM WORKING PRESSURE OF ANY OF THE COMPONENTS CONTAINED WITHIN THE SYSTEM. In most cases, the maximum pressure will be stated on each component of the system.

   If doubt exists as to the pressure to which the system will be subjected, install an ASME approved automatic Pressure Relief or Pressure Regulator in the circulation system for the lowest working pressure of any of the components in the system.
3. The pressure gauge is the primary indicator of how the filter is operating. Maintain your pressure gauge in good working order.

⚠WARNING

Your filter is a piece of machinery, do not tamper with it, attempt to disassemble it or otherwise adjust it unless you fully understand it's operation. Serious injury or death can occur if the equipment is improperly handled. Consult a pool service professional for maintenance and service assistance.

4. Clean your filter when pressure reads between 8-10 psi higher than the original starting pressure. Your filter pressure reading will increase as it removes dirt from your pool. However, this buildup of pressure will vary due to different bathing loads, temperature, weather conditions, etc.
   a. MY ORIGINAL STARTING PRESSURE IS _____ psi (pounds per square inch).
      I SHOULD CLEAN THE FILTER CARTRIDGES AT _____ psi.

NOTE

When the cartridge element filter is used on new pools and after cleaning the elements, introduce into the system .5 pounds of diatomaceous earth per every 100 square feet of filter area, (a one-pound coffee can equals .5 pounds of diatomaceous earth). Mix the diatomite with water and pour it into the skimmer after the pump is primed and the system is operating. This will enhance the filtration of your water.

B. LOCK RING INSTALLATION INSTRUCTIONS

These instructions MUST BE FOLLOWED EXACTLY to prevent the lid from blowing off during system restart or later operation.

1. Perform the following steps before working on any part of the circulating system (e.g., lock ring, pump, filter, valves, etc.).
   a. Turn the pump off and shut off any automatic controls to ensure that the system is not inadvertently started during servicing.
   b. Open the High Flow™ manual air relief valve.
   c. Wait until all pressure is relieved. **Never attempt to assemble, disassemble or adjust the filter lock ring while there is any pressure in the filter.**

⚠WARNING

THIS FILTER OPERATES UNDER HIGH PRESSURE. WHEN ANY PART OF THE CIRCULATING SYSTEM (e.g., LOCK RING, PUMP, FILTER, VALVES, ETC.) IS SERVICED, AIR CAN ENTER THE SYSTEM AND BECOME PRESSURIZED. PRESSURIZED AIR CAN CAUSE THE LID TO BE BLOWN OFF WHICH CAN RESULT IN SEVERE INJURY, DEATH, OR PROPERTY DAMAGE. TO AVOID THIS POTENTIAL HAZARD, FOLLOW THESE INSTRUCTIONS.

2. Be certain the O-ring is in position in the lower tank half. Place the filter lid over the lower tank half, making sure it is fully and firmly seated on the tank half, see Figure 2.
3. Place lock ring over the tank lid, and centering the lock ring on the threads of the tank body. Turn the lock ring clockwise until the safety latches click and the lock ring hits the stops on the body. DO NOT ATTEMPT TO OVER-TIGHTEN THE LOCK RING AFTER LOCK RING HAS HIT THE STOPS ON THE BODY.
4. Follow the System Restart Instructions in Section C.

C. SYSTEM RESTART INSTRUCTIONS

⚠WARNING

THIS FILTER OPERATES UNDER HIGH PRESSURE. WHEN ANY PART OF THE CIRCULATING SYSTEM (e.g., LOCK RING, PUMP, FILTER, VALVES, ETC.) IS SERVICED, AIR CAN ENTER THE SYSTEM AND BECOME PRESSURIZED. PRESSURIZED AIR CAN CAUSE THE LID TO BE BLOWN OFF WHICH CAN RESULT IN SEVERE INJURY, DEATH, OR PROPERTY DAMAGE. TO AVOID THIS POTENTIAL HAZARD, FOLLOW THESE INSTRUCTIONS.

1. **Open the High Flow™ manual air relief valve until it snaps into the full open position (this only requires a quarter turn counterclockwise**). Opening this valve rapidly releases air trapped in the filter.
2. Stand clear of the filter tank, then start the pump.
3. Close the High Flow™ manual air relief valve after a steady stream of water appears.
4. The system is not working properly if either of the following conditions occur.
   a. A solid stream of water does not appear within 30 seconds, after the pump's inlet basket fills with water.
   b. The pressure gauge indicates pressure before water outflow appears.

   If either condition exists, **shut off the pump immediately**, open valves in the water return line to relieve pressure, and clean the air relief valve, see Section F. Cleaning the High Flow™ manual air relief valve. If the problem persists, call (800) 831-7133 for assistance.

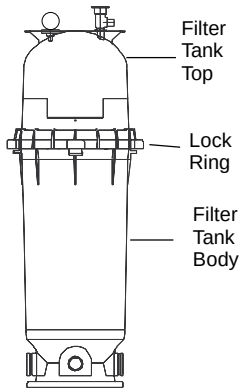

Figure 2.

D. CLEANING THE FILTER

⚠WARNING

The following information should be read carefully since it outlines the proper manner of care and operation for your filter system. As a result of following these instructions and taking the necessary preventative care, you can expect maximum efficiency and life from your filter system.

⚠CAUTION

Please heed all manufacturers' posted instructions, warnings and cautions when using Baquacil® or Baqua® Clean.

1. Turn the pump off, shut off any automatic controls to ensure that the system is not inadvertently started during servicing.

2. Open the filter High Flow™ manual air relief valve, (and the waste drain valve, or cap, if your system has one).

NOTE

Special care must be taken when cleaning cartridge element used in a swimming pool or spa using Baquacil® as a sanitizer. Because of the way Baquacil® works, the cartridge element must be cleaned more thoroughly and more frequently than in a chlorine system. If extreme care is not taken to completely remove all residue from the cartridge element, a buildup will occur. This buildup will significantly shorten the life of the cartridge element.
Baquacil® is a mild coagulant which combines bacterial cells as well as other small particles contributed by the environment, bathers, etc. into particles large enough to be trapped by the filter. In comparison with all other trapped contaminants in a typical pool or spa the amount of bacterial cells that are deposited on the filter is minimal. The resulting deposit is a gray sticky film which can only be removed with Baqua® Clean. If TSP or any TSP type cleaner is used prior to stripping the film, the cleaner and the gray film will combine to form a gum-like substance. Once this occurs, the substance cannot be removed from the media and the cartridge element must be replaced.

---

3. Remove hair and lint strainer pot lid and clean basket. Replace basket and secure lid.
4. Disconnect air relief drain hose if installed.
5. Remove locking ring by depressing safety latches on both sides of ring and rotate counterclockwise, then remove tank lid.
6. Remove the element assembly by placing hands in lifting handles and pulling straight up on the element assembly.
7. Remove the cartridge element from the center support tube.
8. Using a garden hose with a nozzle, direct water spray at the cartridge element to dislodge and wash away accumulated foreign matter. Water may be sprayed at the outside as well as the inside of the cartridge element for thorough cleaning.
9. Turn the cartridge element over several times during the washing operation to clean the media thoroughly.
10. Clean and remove debris from inside the filter tank and from the O-ring and O-ring groove on the tank body.
11. Replace clean cartridge element on support tube and install assembly into the filter tank body, aligning the arrow on the support tube with the inlet port of the filter, making sure it is fully seated. Make sure the internal air relief screen is attached to the top of the element support tube.
12. Replace the tank lid onto the tank body making sure it is fully and firmly seated on the tank body.
13. Place lock ring over tank lid, and centering the lock ring on the threads of the tank body, turn the lock ring clockwise until the safety latches click and the lock ring hits the stops on the body. DO NOT ATTEMPT TO OVER-TIGHTEN THE LOCK RING AFTER LOCK RING HAS HIT THE STOPS ON THE BODY.

NOTE

Any time the filter tank is opened, and/or element assembly is removed, be sure to generously coat the O-ring with silicone lubricant before reassembling the unit. DO NOT USE PETROLEUM BASED LUBRICANTS BECAUSE THEY HAVE A DETERIORATING EFFECT ON RUBBER.

---

14. Replace drain cap and reinstall High Flow™ manual air relief valve drain hose if used.

E. REPLACING CARTRIDGE ELEMENT

Cartridge element life will vary with pool conditions such as bather load, wind, dust, etc. You can expect an average media life of three (3) years under normal conditions.

1. To replace cartridge element follow steps in section D, Cleaning the Filter.

F. CLEANING THE HIGH FLOW™ MANUAL AIR RELIEF VALVE

1. Turn the pump off and shut off any automatic controls to ensure that the system is not inadvertently started during servicing.
2. **OPEN THE HIGH FLOW™ MANUAL AIR RELIEF VALVE UNTIL IT SNAPS INTO THE FULL OPEN POSITION, THEN WAIT UNTIL ALL PRESSURE IS RELIEVED.**
3. With the relief valve attached to the filter tank, pull out the locking tabs and remove the valve stem and cover assembly with a counterclockwise and lifting motion, see Figure 3.
4. Clean debris from the valve stem and body. Verify that the filter tank's air passage is open by inserting a 5/16 in. drill bit through the valve body. Verify that the O-ring are in good condition, properly positioned, and lubricated with a silicone base lubricant.
5. Reinstall the valve stem and cover assembly with a downward and clockwise motion until it snaps into position.

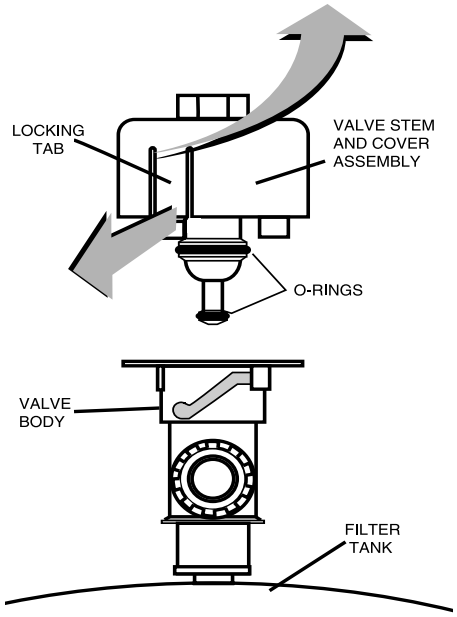

Figure 3.

SECTION III. TROUBLESHOOTING

A. Air entering your filter is dangerous and can cause the lid to blow off. Correct any conditions in your filtration system that allow air to enter the system.

1. Some common ways to identify air entering the system:
   a. Low water level in pool or spa - skimmer is starving for water with pump running. Add water to pool or spa.
   b. Air bubbles or low water level in pump hair and lint pot are caused by; low water level, clogged skimmer basket, split suction cleaner hose, leak in pump hair and lint pot lid, or leak in pump suction line.
   c. Air bubbles coming out of water return lines into pool or spa with pump running, see items 1.a and 1.b of this section.
   d. Air is discharged from the air relief valve on top of the filter when the valve is opened with the pump running, see items 1.a and 1.b of this section, above.

B. Until the water initially put into the pool has been completely filtered, short filter cycles in between cleanings are normal. In most cases pool owners are dismayed by the undesirable color and appearance of water in a newly filled pool. Plaster dust can be responsible for short filter cycles, requiring frequent cleaning.

C. If pressure drops on gauge, check skimmer basket and pump basket first for debris. If the baskets are clean, shut off power to pump and turn off any automatic controls. Then turn motor shaft with your fingers. If it turns freely then the pump must be disassembled and the impeller checked to see if it is clogged. If it is not frozen or clogged then there is an obstruction in the line between the pool and the pump.

D. The pressure gauge is an important part of the filter system. It is your primary indicator of how the system is operating. Maintain your pressure gauge in good working order. Check the operation of your pressure gauge in the following manner:

1. The pressure gauge should go to zero (0) when the system is turned off and pressure is relieved.
2. The pressure gauge should indicate pressure when the system is operating.
3. The pressure gauge should be readable and not damaged in any way.
4. Replace the pressure gauge if it is not meeting the requirements of items D.1 through D.2 of this section, above.

SECTION IV. TECHNICAL DATA

A. Pressure Loss Curve

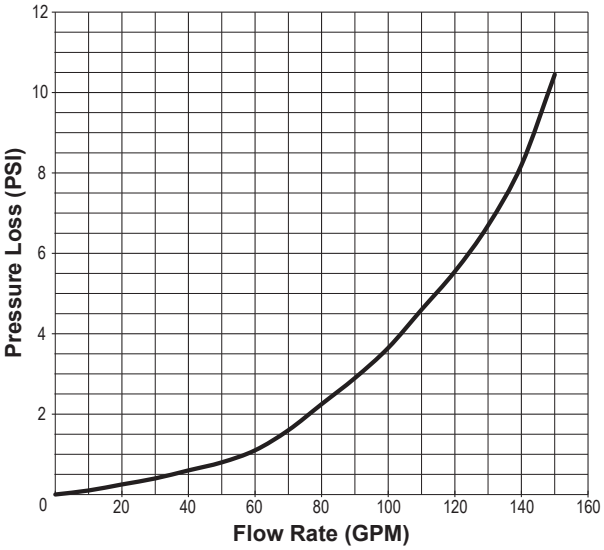

B. Flow Rate Table

		MAX FLOW RATE (RESIDENTIAL)			MAX FLOW RATE (COMMERCIAL)		
P/N	SQ. FT.	GPH	6 HRS.	8 HRS.	GPH	6 HRS.	8 HRS.
160314	50	3,000	18,000	24,000	1,140	6,480	9,120
160315	75	4,500	27,000	36,000	1,680	10,080	13,440
160316	100	6,000	36,000	48,000	2,280	13,680	18,240
160317	150	9,000	54,000	72,000	3,360	20,160	26,880
160318	200	9,000	54,000	72,000	4,500	27,000	36,000

(1) One GPM per sq. ft. shown. Recommended rate for residential is 0.5 GPM per sq. ft.
(2) Commercial flow rate is a maximum of 0.375 GPM per sq. ft.
NOTE: Actual system flow will depend on plumbing size and other system components.

C. Replacement Parts

ITEM	P/N	DESCRIPTION
1	98209800	Manual Air Relief Valve
2	190058	Pressure Gauge
3	178553	Lid, 50 / 100 sq. ft. filter
	178561	Lid, 75 / 150 / 200 sq. ft. filter
4	59052900	Locking Ring
5	87300400	Body O-ring
6	59016200	Air Bleed Kit
7	59053500	Center Core, 50 sq. ft. filter
	59053600	Center Core, 75 sq. ft. filter
	59053700	Center Core, 100 sq. ft. filter
	59053800	Center Core, 150 / 200 sq. ft. filter
8	ULTRA-C1	Cartridge, 50 sq. ft. filter
	ULTRA-C2	Cartridge, 75 sq. ft. filter
	ULTRA-C3	Cartridge, 100 sq. ft. filter
	ULTRA-C4	Cartridge, 150 sq. ft. filter
	ULTRA-C5	Cartridge, 200 sq. ft. filter
9	178562	Base, 50 sq. ft. filter
	178554	Base, 75 sq. ft. filter
	178563	Base, 100 sq. ft. filter
	178560	Base, 150 / 200 sq. ft. filter
10	86202000	Drain Cap Assembly
11	51005000	Drain Cap Gasket
12	39104500	Union Nut “C” Clip
13	98212200	Union Nut
14	071426	Union O-ring
15	79304600	Body, Swivel

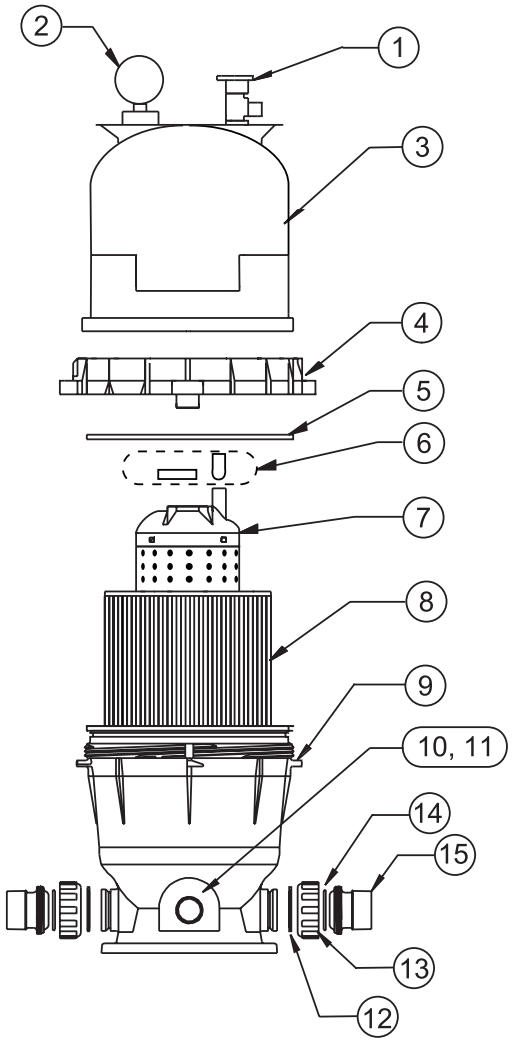

1620 HAWKINS AVE., SANFORD, NC 27330 • 919 566-8000
10951 WEST LOS ANGELES AVE., MOORPARK, CA 93021 • 805 553-5000

All indicated Pentair trademarks and logos are property of Pentair or its global affiliates. Third party registered and unregistered trademarks and logos are the property of their respective owners.

© 2025 Pentair Water Pool and Spa, Inc. All rights reserved. WWW.PENTAIR.COM

P/N 178556 REV. E 8/29/25