STA-RITE®

CSPH, CCSPH, 5CSPH AND 5CCSPH SERIES CENTRIFUGAL PUMPS WITH TRAP

O W N E R ' S M A N U A L

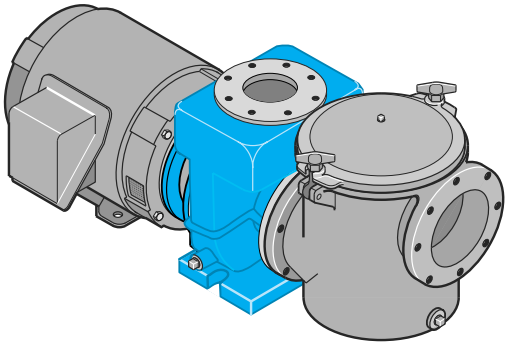

INSTALLATION, OPERATION & PARTS

H.P.	Phase	230/460V/60 Hz. CSPH Series	200V/60 Hz. CSPH2 Series	190/380V/50 Hz. 5CSPH Series
5	3	–	–	5CSPHJ3-142
7.5	1	CSPHK-142	–	–
7.5	3	CSPHK3-142	CSPH2K3-142	5CSPHK3-143
7.5	3	CSPHK3-142S	–	–
10	1	CSPHL-143	–	–
10	3	CSPHL3-143	CSPH2L3-143	5CSPHL3-144
10	3	CSPHL3-143S	–	–
15	3	CSPHM3-144	CSPH2M3-144	5CSPHM3-145
15	3	CSPHM3-144S	–	–
20	3	CSPHN3-145	CSPH2N3-145	–
20	3	CSPHN3-145S	–	–
		CCSPH Series	CCSPH2 Series	5CCSPH Series
5	3	–	–	5CCSPHJ3-142
7.5	1	CCSPHK-142	–	–
7.5	3	CCSPHK3-142	CCSPH2K3-142	5CCSPHK3-143
7.5	3	CCSPHK3-142S	–	–
10	1	CCSPHL-143	–	–
10	3	CCSPHL3-143	CCSPH2L3-143	5CCSPHL3-144
10	3	CCSPHL3-143S	–	–
15	3	CCSPHM3-144	CCSPH2M3-144	5CCSPHM3-145
15	3	CCSPHM3-144S	–	–
20	3	CCSPHN3-145	CCSPH2N3-145	–
20	3	CCSPHN3-145S	–	–

This manual should be given to the end user of this pump; its use will reduce service calls and chance of injury and will lengthen pump life.

© 2020 Pentair. All rights reserved. This document is subject to change without notice.

1620 Hawkins Ave., Sanford, NC 27330 • (919) 566-8000
10951 West Los Angeles Ave., Moorpark, CA 93021 • (805) 553-5000

All indicated Pentair trademarks and logos are property of Pentair. Third party registered and unregistered trademarks and logos are the property of their respective owners. Because we are continuously improving our products and services, Pentair reserves the right to change specifications without prior notice. Pentair is an equal opportunity employer.

S248 (Rev D 10/13/20)

‘CSPH’ SERIES SELF-PRIMING CENTRIFUGAL PUMP and TRAP

To avoid unneeded service calls, prevent possible injuries, and get the most out of your pump, READ THIS MANUAL CAREFULLY!

The Sta-Rite ‘CSPH’ Series Self-priming Centrifugal pump:

Is designed for use with commercial swimming pools or as a centrifugal pump.

Is an excellent performer; durable, reliable.

Table of Contents

Safety Instructions 3

Dimensions and Specifications 4-5

Uncrating and Inspection.....6

Installation.....6-9

Electrical 10

Operation 11-12

Maintenance.....13

Troubleshooting Guide.....14

Disassembly/Assembly.....15

Repair Parts List.....16-19

For technical information about this product, contact the installer or call Customer Support at:

Sanford, North Carolina (8 A.M. to 5 P.M.)

Phone: (800) 831-7133

Moorpark, California (8 A.M. to 5 P.M.)

Phone: (800) 831-7133

Fax: (800) 284-4151

Visit www.pentair.com

IMPORTANT SAFETY INSTRUCTIONS

Always follow basic safety precautions with this equipment, including the following.

⚠WARNING This pump is not to be used by persons (including children) with reduced physical, sensory or mental capabilities, or lack of experience and knowledge, unless they have been given supervision or instruction.

⚠ CAUTION This pump is for use with permanently installed pools and may also be used with hot tubs and spas if so marked. Do not use with storable pools. A permanently installed pool is constructed in or on the ground or in a building such that it cannot be readily disassembled for storage. A storable pool is constructed so that it may be readily disassembled for storage and reassembled to its original integrity.

⚠ CAUTION These motors do not contain internal thermal protection. Thermal protection must be provided by the installer.

SAVE THESE INSTRUCTIONS

READ AND FOLLOW SAFETY INSTRUCTIONS!

⚠ This is the safety alert symbol. When you see this symbol on your system or in this manual, look for one of the following signal words and be alert to the potential for personal injury.

⚠ DANGER warns about hazards that will cause death, serious personal injury, or major property damage if ignored.

⚠WARNING warns about hazards that can cause death, serious personal injury, or major property damage if ignored.

⚠ CAUTION warns about hazards that will or can cause minor personal injury or property damage if ignored.

NOTICE indicates special instructions not related to hazards.

Carefully read and follow all safety instructions in this manual and on equipment. Keep safety labels in good condition; replace if missing or damaged.

⚠WARNING
Hazardous pressure

Incorrectly installed or tested equipment may fail, causing severe injury or property damage.
Read and follow instructions in owner's manual when installing and operating equipment.

1. Have a trained pool professional perform all pressure tests.
2. Do not connect system to a high pressure or city water system.
3. Use equipment only in a pool or spa installation.
4. Install pump with at least 2 hydraulically balanced main drains equipped with correctly installed, screw-fastened, anti-entrapment certified covers. See Page 6.
5. Trapped air in system can cause explosion. BE SURE all air is out of system before operating or testing equipment.

Before pressure testing, make the following safety checks:

- Check all clamps, bolts, lids, and system accessories before testing.
- Release all air in system before testing.
- Tighten Sta-Rite trap lid to 25 ft. lbs. (3.5 kg-m) torque for testing.
- When pressure testing pumps and traps listed in this manual, water pressure for test must be less than 40 PSI (2.8 kg/cm^2).
- Water Temperature for test must be less than 100° F (38° C).
- Limit test to 24 hours. After test, visually check system to be sure it is ready for operation. Remove trap lid and retighten hand tight only.

  NOTICE: These parameters apply to Sta-Rite equipment only.
  For non-Sta-Rite equipment, consult manufacturer.

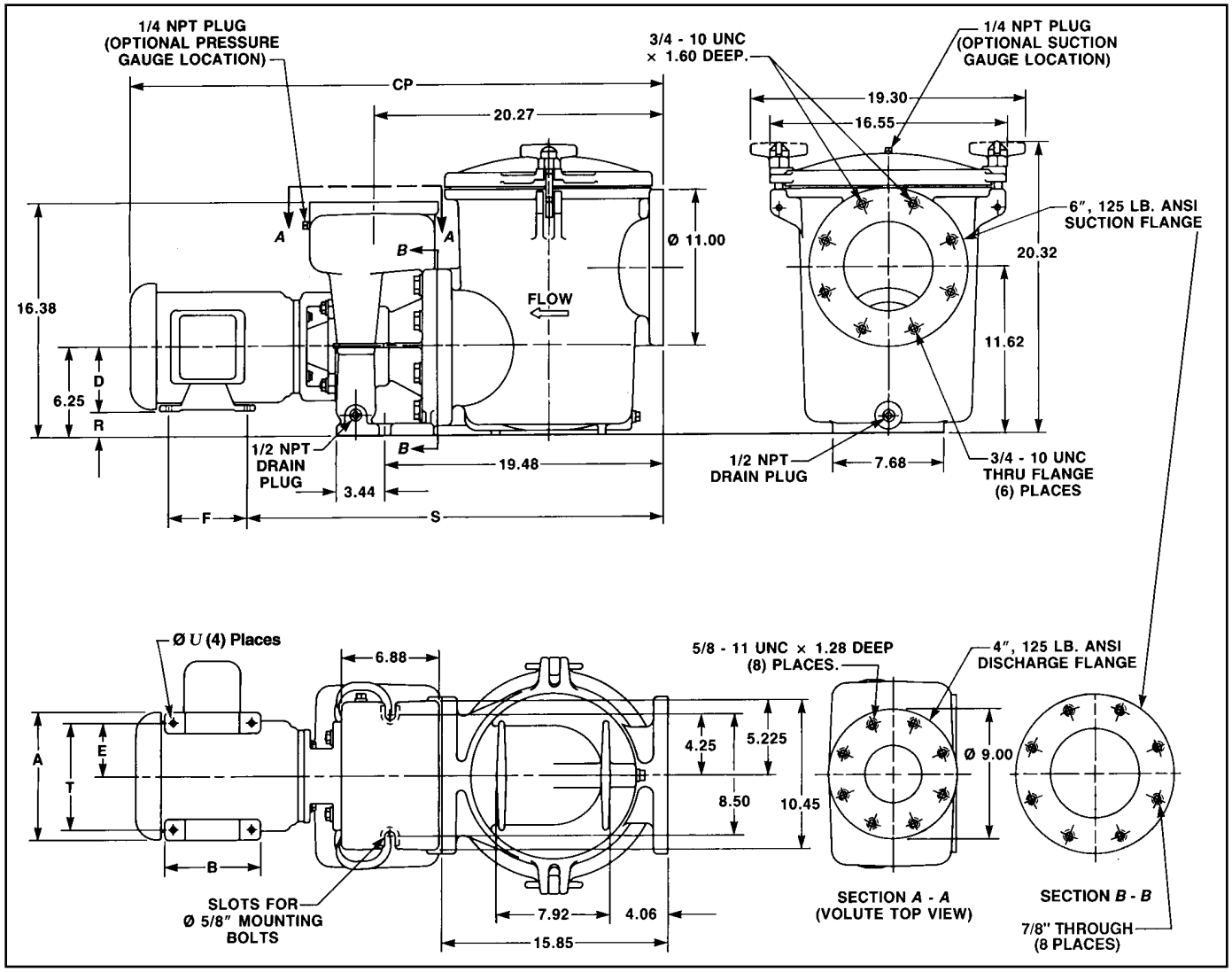

Table I – OUTLINE DIMENSIONS – In Inches*

(Includes Package 184)

Model No.	Volt/Hz/Ph	HP	A	B	CP	D	E	F	R	S	T	U
CSPHK-142	230/60/1	7.5	10.62	7.00	39.44	5.25	4.25	5.50	1.00	30.00	8.50	.44
CSPHK3-142	230-460/60/3	7.5	9.00	6.75	40.31	4.50	3.75	5.50	1.75	29.13	7.50	.44
CSPHL-143	230/60/1	10	10.35	8.26	42.69	5.25	4.25	7.00	1.00	30.00	8.50	.44
CSPHL3-143	230-460/60/3	10	10.62	7.00	41.00	5.25	4.25	5.50	1.00	30.00	8.50	.44
CSPHM3-144	230/460/60/3	15	10.62	8.50	42.50	5.25	4.25	7.00	1.00	30.00	8.50	.44
CSPHN3-145	230/460/60/3	20	12.50	10.80	46.75	6.25	5.00	8.20	0.00	31.62	10.00	.54
CSPH2K3-142	200/60/3	7.5	9.00	6.75	40.31	4.50	3.75	5.50	1.75	29.13	7.50	.44
CSPH2L3-143	200/60/3	10	10.62	8.50	42.50	5.25	4.25	7.00	1.00	30.00	8.50	.44
CSPH2M3-144	200/60/3	15	10.62	8.50	42.50	5.25	4.25	7.00	1.00	30.00	8.50	.44
CSPH2N3-145	200/60/3	20	13.38	12.44	48.50	6.25	5.00	10.00	0.00	31.65	10.00	.54
5CSPHJ3-142	190/380/50/3	5	9.00	6.75	38.93	5.25	3.75	5.50	1.75	28.90	7.50	.44
5CSPHK3-143	190/380/50/3	7.5	10.62	7.00	40.93	5.25	4.25	5.50	1.00	28.87	8.50	.44
5CSPHL3-144	190/380/50/3	10	10.62	8.50	42.35	5.25	4.25	7.00	1.00	28.87	8.50	.44
5CSPHM3-145	190/380/50/3	15	12.50	10.80	46.68	6.25	5.00	8.25	0.00	31.25	10.00	.44

* CCSPH models are dimensionally equivalent to CSPH models.

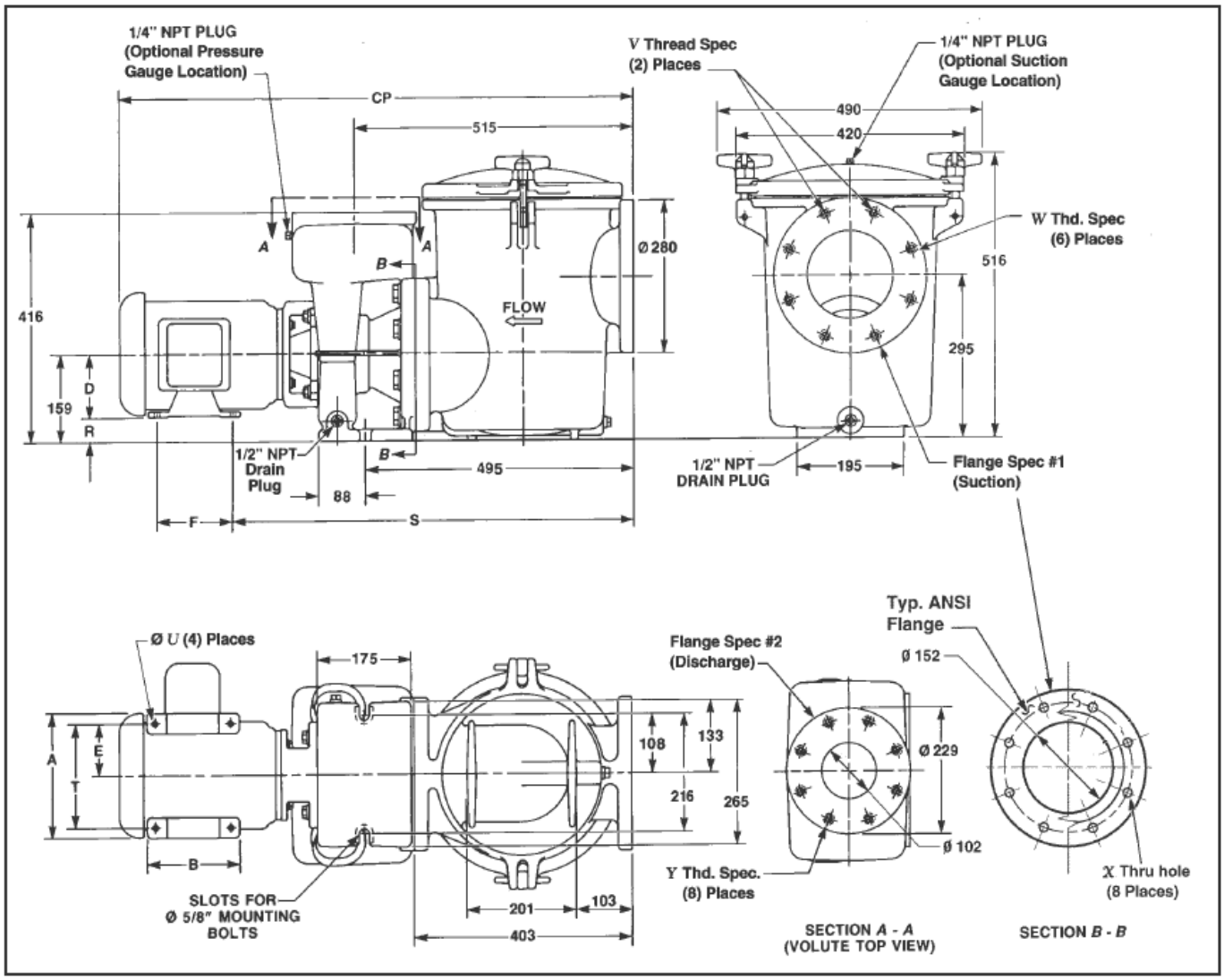

Table II – OUTLINE DIMENSIONS and Flange Specs – In Millimeters*

(Includes Package 184 and 184C)

Model No.	Volt/Hz/Ph	HP	A	B	CP	D	E	F	R	S	T	U
5CSPHJ3-142, -142E	190/380/50/3	5	229	171	989	114	95	140	44	734	191	11
5CSPHK3-143, -143E	190/380/50/3	7.5	270	179	1,040	133	108	140	25	733	216	11.5
5CSPHL3-144, -144E	190/380/50/3	10	270	216	1,076	133	108	178	25	733	216	11.5
5CSPHM3-145, -145E	190/380/50/3	15	318	274	1,186	159	127	210	0	794	254	13.5

Model No.	Flange Spec #1	Flange Spec #2	V Thd. Spec	W Thd. Spec	X Thru Hole	Y Thd. Spec
5CSPHJ3-142 5CSPHK3-143 5CSPHL3-144 5CSPHM3-145	6” 125 Lb. ANSI	4” 125 Lb. ANSI	3/4”-10 UNC x 31.75 mm Deep	3/4”-10 UNC Thru	Ø22.35 mm Thru	5/8”-11 UNC x 32.5 mm Deep
5CSPHJ3-142E 5CSPHK3-143E 5CSPHL3-144E 5CSPHM3-145E	N/A	N/A	M20 x 2.5 29 mm Deep	M20 x 2.5 Thru	Ø22mm Thru	M16 x 2 29.5 mm Deep

* 5CCSPH (epoxy coated) models are dimensionally equivalent to 5CSPH models and use the same flange specifications as equivalent 5CSPH models.

UNCRATING AND INSPECTION

Handle with care.
Pump and strainer are heavy. Remove outer carton before trying to move.
Check items received against packing list to be sure that all equipment has been received.
Inspect for shipping damage. If found, file claim with carrier immediately.

Cleanup

Clean up all trash and other materials which will interfere with installation from foundation and surrounding area.
For easy assembly, make sure all threaded joints and mating surfaces are clean. If necessary, clean with wire brush and solvent.

⚠WARNING Fire and explosion hazard. To reduce danger of explosion and fire, do not use gasoline as a cleaning solvent.

Remove all foreign material (packing, etc.) from pump and strainer.

⚠WARNING Fire and burn hazard. Modern motors run at high temperatures. To reduce the risk of fire, do not allow leaves, debris, or foreign matter to collect around the pump motor. To avoid burns when handling the motor, let it cool for 20 minutes before trying to work on it.

INSTALLATION

Only qualified, licensed personnel should install pump and wiring.

Location

Ambient air temperature should be kept at 104° F (40° C) or less.
Store pool chemicals away from pump.

Foundation

Foundation must:
Be located away from corrosive or flammable liquids.

Have enough ventilation to maintain air temperature at less than the maximum ambient temperature rating (Max. Amb.) listed on the motor model plate. If this pump is installed in an enclosure/pump house, the enclosure must have adequate ventilation and air circulation to keep the temperature in the enclosure at or below the motor's rated ambient temperature whenever the pump is running.

Be Solid - Level - Rigid - Vibration free.

> **NOTICE:**
> These pumps must be installed with strainer PKG 184/184C in order to have NSF Certification at the installation; see NSF Standard 50.

CSP/CCSP Pump Piping

Installation Diagram. Suction Lift Installation

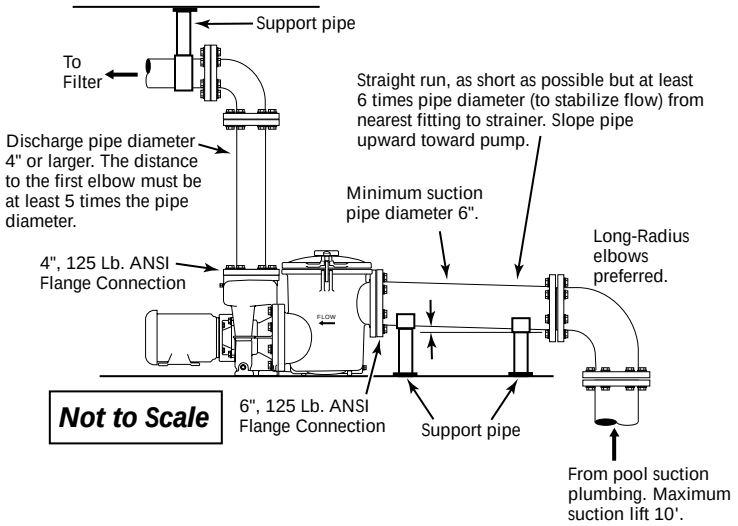

Be provided with necessary hold-down bolts, washers, and shims.
Allow pump inlet to be as close to water level as possible.
Use short, direct suction pipe (to reduce friction losses).
Maximum suction lift is 10’ (3 m).
Allow for gate valves in suction and discharge piping.
If vertical suction lift is higher than 5 feet, installation of a foot valve at lowest portion of the vertical suction pipe may be needed.
Have adequate floor drainage to prevent flooding.
Be protected from excess moisture.
Allow adequate access for servicing pump and piping.

CSP/CCSP Pump Piping

Installation Diagram. Flooded Suction Installation

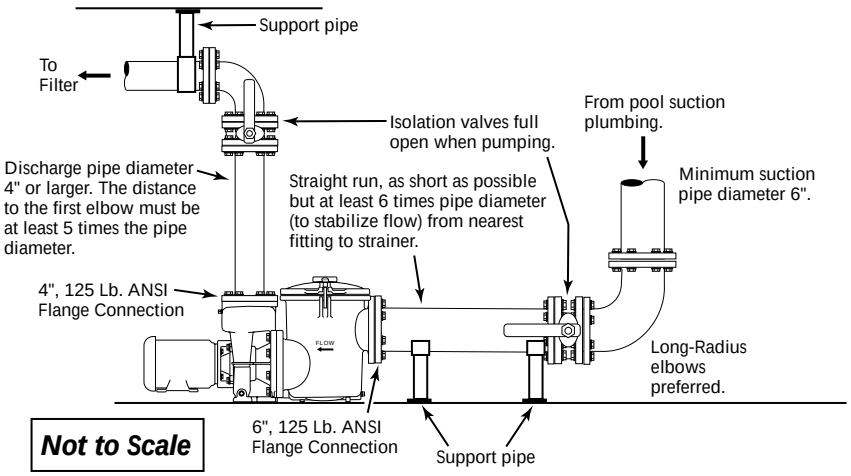

POOL PUMP SUCTION REQUIREMENTS

⚠WARNING Pump suction is hazardous and can trap and drown or disembowel bathers. Do not use or allow anyone else to use a pool, spa, or hot tub unless it has at least two suction outlets to each pump suction line (see “Outlets Per Pump,” below). Do not use or operate swimming pools, spas, or hot tubs if a suction outlet cover is missing, broken, or loose. Follow the guidelines below for a pump installation which minimizes risk to users of pools, spas, and hot tubs.

Entrapment Protection

The pump suction system must provide protection against the hazard of suction entrapment or hair entrapment/entanglement.

Suction Outlet Covers

All suction outlet covers must be maintained. They must be replaced if cracked, broken, or missing.
See Page 8 for outlet cover certification requirements.
All suction outlets must have correctly installed, screw-fastened covers in place.

Outlets Per Pump

Provide at least two hydraulically balanced main drains, with covers (see Figure 1, Page 8), for each swimming pool pump suction line. The centers of the main drains (suction fittings) must be at least three feet apart.

The system must be built so that it cannot operate with the pump drawing water from only one main drain (that is, there must be at least two main drains connected to the pump whenever it is running, see Figure 1). However, if two main drains run into a single suction line, the single suction line may be equipped with a valve which will shutoff both main drains from the pump (see Figure 1).
More than one pump can be connected to a single suction line as long as the requirements above are met.

Water Velocity and Flow Rates

The maximum water velocity must be six feet per second or less unless the outlet complies with the latest ASME/ANSI Specification for Suction Fittings For Use in Swimming Pools, Spas, Hot Tubs, and Whirlpool Bathtub Applications.

If 100% of the pump's flow comes from the main drain system, the maximum water velocity in the pump suction hydraulic system must be six feet per second or less even if one main drain (suction fitting) is completely blocked. The flow through the remaining main drain(s) must comply with the latest ASME/ANSI Specification for Suction Fittings For Use in Swimming Pools, Spas, Hot Tubs, and Whirlpool Bathtub Applications.

Piping – General

System piping must be at least equal to size of pump connections.

To prevent strain on the pump casing and foundation, pipe and fittings must be aligned to pump without forcing.

To avoid strains on the pump, support both suction and discharge pipes independently. Place these supports near the pump.

To avoid a strain left by a gap at the last connection, start all piping at the pump and run pipe away from the pump.

⚠ WARNING

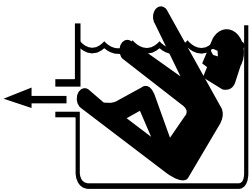

Hazardous suction. Can trap hair or body parts, causing severe injury or death.

Do not block suction.

Piping – Suction

⚠ WARNING Hazardous suction. Risk of severe injury or drowning from hair or body entrapment. To reduce risk of entrapment against pump suction opening, connect pump to multiple drains and skimmers of non-entrapment design. See "Pool Pump Suction Requirements," Page 7.

NOTICE: If pump suction becomes clogged, pump will cavitate, damaging pump internal parts. Keep suction pipe clear of debris, dirt, etc.

NOTICE: To prevent flooding when removing pump for service, all flooded suction systems must have valves in suction and discharge pipes. Use at least 6" (152 mm) pipe. Never use a suction pipe smaller than the pump suction connection.

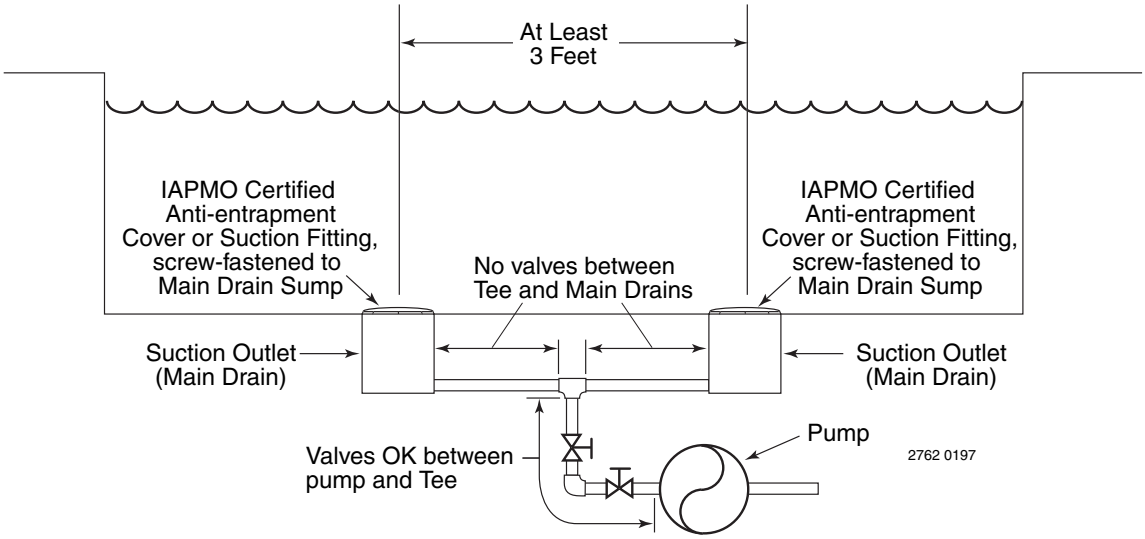

Figure 1 – Recommended pump suction layout. See Pages 6 and 7 for Pump Installation drawings.

Use larger pipe as required to keep water velocity below six feet per second in suction lines and ten feet per second in discharge lines. If code requires a lower water velocity, comply with the code.

Suction pipe must rise continuously from source to pump. To avoid airlocking, do not allow high spots in pipe.

When using reducer to connect to pump flange, use an eccentric reducer with the straight side on top.

Piping – Discharge

To minimize friction losses, make piping one size larger than pump openings.

Fittings restrict flow; for best performance use fewest possible fittings.

Avoid fittings which could cause an air trap.

Pool fittings must conform to International Association of Plumbing and Mechanical Officials (IAPMO) standards.

Strainer

⚠WARNING Hazardous pressure. Maximum hydrostatic test pressure is 40 PSI (275 kPa) water pressure. To avoid explosion hazard, DO NOT test strainer with air pressure. Air pressure in strainer can blow cover off of strainer body, which can cause severe or fatal injury. Remove vent plug (Key No. 9, Page 19) and release ALL air (wait for a steady stream of water from vent) before hydrostatically testing strainer.

To avoid breaking pump or putting unnecessary strains on pump or strainer body, support pipe independently of pump/strainer.

Center the strainer cover when installing it (especially when pressure testing).

When installing cover, clean O-Ring groove in strainer body, and lubricate with petroleum jelly as follows:

A. O-Ring;
B. Sealing surfaces of strainer cover and body;
C. Threads and faces of wing nuts.

This will prevent corrosion, improve seal, and ease maintenance.

If strainer is installed backwards, debris will collect in suction pipe instead of in strainer basket. Install strainer with cast-on flow arrows pointing in direction of water flow.

Basket will only go into strainer one way; don't force it.

ELECTRICAL

Pressure Drop Curve for Strainer Packages:

184 and 184C

Maximum Flow Rate 850 GPM

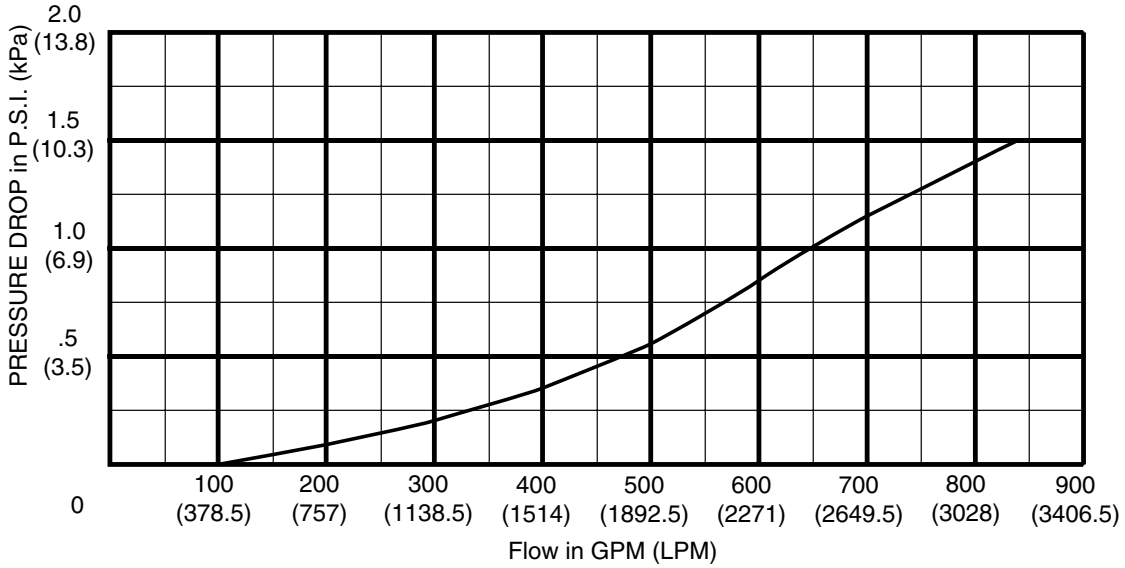

⚠ WARNING

Hazardous voltage. Can shock, burn, or cause death.

Ground pump before connecting to power supply.

⚠ WARNING Disconnect power at service panel before connecting motor.

⚠ Ground motor before connecting to electrical power supply.

⚠ Failure to ground motor can cause severe or fatal electrical shock hazard.

⚠ Do not ground to a gas supply line.

⚠ To avoid dangerous or fatal electrical shock, turn OFF power to motor before working on electrical connections.

⚠ Match supply voltage to nameplate voltage. Incorrect voltage and/or wiring can cause fire or seriously damage motor and voids warranty.

⚠ All electrical wiring, grounding, and bonding must be done by a licensed electrical contractor who is familiar with commercial swimming pool installations and electrical codes and requirements.

NOTICE: Due to wide variation in electrical equipment, power supply, and installation requirements, this manual does not make specific recommendations concerning auxiliary equipment or fusing/wiring.

Wire sizing, wire type, branch circuit fuse protection, motor starter, control equipment, and related items must meet National Electrical Code and local code requirements.

Motors are supplied by several manufacturers and nameplate data (service factor, maximum amperage, etc.) will vary. Consult control manufacturer and motor nameplate on your pump to correctly choose and size motor starter and control equipment for your particular installation. Specific electrical questions or problems should be addressed to the manufacturer of the electrical component in question.

Voltage/Phase

Voltage at motor must be not more than 10% above or below motor nameplate rated voltage or motor may overheat, causing overload tripping and reduced component life. If voltage is less than 90% or more than 110% of rated voltage when motor is running at full load, consult power company.

Do not try to connect 3-phase motors to single phase power supply or single phase motors to 3-phase power supply.

Emergency Shutoff

Install an Emergency Shutoff Switch near pool. Clearly mark this switch and mount it in a location that is accessible to bathers or pool operating personnel (e.g. lifeguards). Make sure that all lifeguards and pool personnel understand the switch's use in case of emergency (entrapment, electrical malfunction, etc).

Grounding/Bonding

Install, ground, bond and wire motor according to local and National Electrical Code requirements.

Permanently ground motor. Use green grounding terminal provided under motor canopy or access plate; use size and type wire required by code. Connect motor ground terminal to electrical service ground.

Bond motor to pool structure according to local or National Electrical Code. Use a solid copper conductor, size No. 8 (6.0 mm^2) AWG or larger.

Wiring

Pump must be permanently connected to circuit; be sure no other appliances are on the same circuit.

Make sure that motor nameplate connection diagram includes connection diagram for available voltage. If not, consult power company or a licensed electrician.

Check rotation before attaching strainer and before making final connection to power supply. Pump should rotate counterclockwise when viewed through pump suction port.

To change rotation: Three phase motors: Reverse any two leads to motor.
Single phase motors: Follow motor manufacturer's instructions to reverse.

OPERATION

The following items are for Saudi Arabian export compliance only:

3 Phase, 60Hz, 230/460V Pumps IEC 602335-1 and 602335-2-41
Maximum Water Temperature = 40°C Non-Submersible Pump
IP Rating: IPX4 Hmin = 3m Maximum Total Head = 46.6m
This pump is to be supplied by an isolating transformer or supplied through a residual current device (RCD) having a rated residual current not exceeding 30mA.

⚠ DANGER Hazardous suction. Can trap hair or body parts, causing severe injury or death by drowning. Do not block pump or strainer suction with body. Small children using pool must ALWAYS have close adult supervision!

⚠ WARNING Explosion hazard. Do not run pump against closed discharge valve. To do so can boil water in pump body, and can cause severe burns to people working on pump.

⚠ WARNING Fire and burn hazard. Modern motors run at high temperatures. To reduce the risk of fire, do not allow leaves, debris, or foreign matter to collect around the pump motor. To avoid burns when handling the motor, let it cool for 20 minutes before trying to work on it. An automatic internal cutoff switch protects the motor from heat damage during operation.

⚠ CAUTION NEVER run pump dry. Running pump dry may damage seals, causing leakage and flooding. Fill pump with water before starting motor.

⚠ Before removing strainer cover:

1. STOP PUMP before proceeding.
2. CLOSE GATE VALVES in suction and discharge pipes.
3. RELEASE ALL PRESSURE from pump and piping system.

⚠ After pressure test, release all pressure before removing strainer cover!

NOTICE: Provide adequate ventilation. Ambient air temperature should be 104° F (40° C) or less.

NOTICE: To prevent corrosion damage, store pool chemicals in another room away from pump.

Priming Pump

⚠ WARNING Hazardous Pressure! Before removing strainer cover, remove vent plug in cover and release all pressure from system.

In a flooded suction system open suction/discharge valves to prime. If pump is not in a flooded suction system, remove strainer cover; fill strainer and pump with water.

If necessary, use a wrench when removing wing nuts.

When installing cover, clean O-Ring sealing surface on strainer body, and lubricate with petroleum jelly as follows:

A. O-Ring and Sealing surfaces of strainer cover and body;
B. Threads and faces of wing nuts.
This will prevent corrosion, improve seal, and ease maintenance.

Center strainer cover when installing it (especially when pressure testing).

Hand tighten wing nuts. When tightening, alternate back and forth between nuts to compress O-Ring evenly.

Maximum wing nut torque is 25 ft.-lbs. (3.5 kg.-m).

Start pump; it should prime now. Priming time will depend on vertical length of suction lift (10'/3m maximum) and horizontal length of suction pipe.

Pump is tested to prime to 10 feet (3m) in nine minutes, using 6” piping. Priming time will vary with altitude above sea level.

If pump does not prime, make sure that all valves are open, suction pipe end is under water and that there are no leaks in suction pipe. See Troubleshooting Guide, Page 14.

NOTICE: To avoid corrosion damage to pump and strainer, do not add chemicals to system anywhere on suction side of pump (including into skimmers). Do not pour chemicals into strainer. Follow chemical manufacturer's instructions when mixing or adding chemicals to system.

Storage/Winterizing

NOTICE: Allowing pump to freeze will damage pump and void warranty.

NOTICE: Do not use anti-freeze (except propylene glycol) in your pool system. Propylene glycol (RV anti-freeze) is non-toxic and will not damage plastic system components. Other anti-freezes are highly-toxic and may damage plastic system components.

Drain all water from pump and piping when expecting freezing temperatures or when storing pump for a long time.

Keep motor dry and covered during storage.

To avoid condensation/corrosion problems, do not cover pump with plastic.

For outdoor/unprotected installation:

1. Enclose entire system in a weatherproof enclosure.
2. To avoid condensation/corrosion damage, allow ventilation; do not wrap system in plastic.
3. Use a 40% propylene glycol/60% water solution to protect pump to -50° F (-46° C).

Draining Pump

⚠WARNING Hazardous Voltage. Can shock, burn or cause death. Disconnect all power before draining the pump.

⚠WARNING Explosion Hazard. Purging the system with compressed air can cause components to explode causing risk of severe injury or death to anyone nearby.

1. Pump down water level until it is below all inlets to pool.
2. Remove the strainer cover. When the interior is dry, replace the strainer cover.
3. To prevent pump from freezing, drain pump body and strainer through the two drain plugs. Gravity drain the system as far as possible.
4. Clean the pump thoroughly and replace the priming plug.
5. Be sure the motor is kept dry and covered.

Startup for Winterized Equipment

1. Remove any temporary weather protection placed around the system for shutdown.
2. Follow the filter manufacturer's instructions for reactivation of the filter.
3. Inspect all electrical wiring for damage or deterioration over the shutdown period. Have a qualified serviceman repair wiring as needed.
4. Inspect and tighten all watertight connections.
5. Open all valves in suction and return piping.
6. Remove any winterizing plugs in the system.
7. Drain all antifreeze from the system.
8. Close all drain valves and replace all drain plugs in the piping system.
9. Prime pump according to instructions, Page 11.

MAINTENANCE - Strainer

⚠WARNING Hazardous pressure. Before removing strainer cover, loosen or remove 1/4” NPT vent plug in cover and release all pressure.

NOTICE: Do not allow strainer to freeze.

If system will be shut down for one day or more, drain strainer and system to prevent corrosion.

Remove strainer cover to allow interior to dry out when storing for the season. When interior is dry, replace cover.

Remove drain plug when storing for season. Leave plug out until system is restarted the following season.

To remove strainer cover, unscrew two wing nuts. If necessary, use a wrench on flats when removing wing nuts.

NOTICE: A clogged basket will cause cavitation, which will damage strainer basket, impeller, and pump. Clean weekly or each time you vacuum pool, whichever comes first.

NOTICE: Basket is a close fit in body of strainer. When cleaning basket, do not deform.

Hose basket out well.

DO NOT hammer on basket or otherwise mistreat it.

When installing cover, clean O-Ring groove in strainer body.

Lubricate O-Ring, sealing surfaces of strainer cover and body, and threads and faces of wing nuts with petroleum jelly to prevent corrosion, improve seal, and ease maintenance.

Center strainer cover when installing it (especially when pressure testing).

Hand tighten wing nuts. When tightening, alternate back and forth between nuts to compress O-Ring evenly.

Maximum wing nut torque is 25 ft.-lbs. (3.5 kg-m).

If possible, protect from weather at all times.

For storage of outdoor installation:

1. Drain system.
2. Dry as much as possible.
3. Lubricate with petroleum jelly.
4. Reassemble.
5. Leave drain plug out during storage.

TROUBLESHOOTING

SYMPTOM	PROBABLE CAUSE																	
	GROUP 1 ELECTRICAL										GROUP 2 MECHANICAL				GROUP 3 SYSTEM			
	A	B	C	D	E	F	G	H	I	J	A	B	C	D	A	B	C	D
PUMP RUNS, BUT NO WATER DELIVERED											●	●			●	●		●
NOT ENOUGH WATER DELIVERED			●	●					●	●	●		●		●	●		
NOT ENOUGH PRESSURE			●	●					●	●	●		●		●	●		
EXCESSIVE VIBRATION									●	●	●			●		●	●	
ABNORMAL NOISE										●	●	●		●		●	●	
PUMP STOPS	●	●	●	●	●	●	●	●										
OVERHEATING		●	●	●					●	●			●	●			●	

CAUSE	CORRECTIVE ACTION
I. ELECTRICAL	
A. NO VOLTAGE IN POWER SYSTEM	Check phase-to-phase on line side of starter contactor. Check circuit breaker or fuses.
B. NO VOLTAGE ON ONE PHASE (THREE PHASE UNITS)	Check phase voltage on line side of starter contactor. Isolate open circuit (circuit breaker, fuse, broken connections, etc.)
C. LOW VOLTAGE AT MOTOR	Running voltage across each leg of motor must be ± 10% of nominal voltage shown on nameplate.
D. MOTOR LEADS IMPROPERLY GROUPED FOR VOLTAGE	Refer to lead grouping diagram on motor nameplate.
E. CONTROL FAILURE	Check control device, starter contactor, H-O-A selector switch, etc., for malfunction.
F. THERMAL OVERLOAD SWITCH OPEN	Check for drag or other overload.
G. INSULATION FAILURE	Check motor or windings to ground with megohmmeter.
H. OPEN WINDINGS	Check leg-to-leg with ohmmeter.
I. FREQUENCY VARIATION	Check frequency of power system. Must be less than 5% variation from motor nameplate rating.
J. WRONG DIRECTION OF ROTATION	Reverse rotation of three phase motor by interchanging any two leads. See Manufacturer's Instructions for reversing single phase motor.
2. MECHANICAL	
A. FLOW THROUGH PUMP COMPLETELY OR PARTIALLY OBSTRUCTED	Locate and remove obstruction. Refer to Repair Instructions for disassembly.
B. PUMP NOT PRIMED	Reprime. Inspect suction system for air leaks.
C. INTERNAL LEAKAGE	Check impeller for wear of controlled clearances. (See Repair Instructions.)
D. LOOSE PARTS	Inspect, repair.
3. SYSTEM	
A. PRESSURE REQUIRED BY SYSTEM AT DESIGN FLOW RATE EXCEEDS PRESSURE RATING OF PUMP	Compare pump pressure and flow rate against pump characteristic curve. Check for closed or partially closed valve in discharge piping system. Reduce system pressure requirement. Increase pressure capability of pump.
B. OBSTRUCTION IN SUCTION PIPING	Locate and remove obstruction.
C. PRESSURE RATING OF PUMP EXCEEDS PRESSURE REQUIREMENT OF SYSTEM AT DESIGN FLOW RATE	Compare pump pressure and flow rate against pump characteristic curve. Inspect discharge piping system for breaks, leaks, open by-pass valves, etc. If necessary, reduce flow rate by partially closing discharge valve.
D. SUCTION LIFT EXCEEDS 10' DESIGN MAXIMUM.	Locate pump closer (vertically) to water source.

‘CSPH’ COMMERCIAL POOL PUMP DISASSEMBLY/ASSEMBLY

Locate your Model Number on the correct Exploded View, Pages 16, 17 or 18, for Key Numbers.

1. Disconnect all power to pump. Close valves to isolate pump from system.
2. Drain pump and trap; be sure to vent strainer (Key No. 9, Page 19).
3. Support motor so it does not drop when bracket (Key No. 4) is unbolted from the volute.
4. Unbolt the bracket (Key No. 4) from volute (Key 20); slide bracket, impeller and motor out as a unit.
5. Remove impeller screw (Key No. 15), stat-o-washer (Key No. 14), impeller washer (Key No. 13).
6. With a wheel puller, pull impeller (Key No. 11).
7. Remove shaft seal retaining ring (Key No. 7).
8. To remove or assemble the shaft sleeve (Key No. 8) call customer service. (ref. TSB # C80-173SA).
9. Unbolt the bracket from motor and slide bracket off shaft, bringing the rotating portion of the mechanical seal (a portion of Key No. 6) with it.
10. Turn bracket face down on bench; tap out stationary half of seal (the other portion of Key No. 6).
11. Inspect the impeller skirt (outside impeller eye) and the wear ring (Key No. 22) for damage, pitting or wear; replace it if necessary.
12. Remove old gaskets and clean all gasket surfaces.

    ⚠WARNING Fire and explosion hazard. DO NOT use gasoline as a cleaning solvent.

13. Press in new stationary seal half (a portion of Key No. 6). If necessary, protect seal surface with a cardboard washer and tap into place using a piece of plastic pipe for a press. DO NOT scratch, nick or mar seal face.
14. Install the bracket (Key No. 4) on motor (Key No. 1); be careful not to nick seal on shaft shoulder.
15. Slide rotating half of new seal (a portion of Key No. 6) onto shaft sleeve (Key No. 8), polished face first; be careful not to nick seal on shaft shoulder.
16. Install the shaft seal retaining ring (Key No. 7).
    NOTICE: Do not lubricate shaft gaskets as this may interfere with sealing.
17. Install a new impeller gasket (Key No. 10) on the shaft.
18. Install the impeller (Key No. 11) on shaft. Pull impeller into place with impeller screw (Key No. 15) and impeller washer (Key No. 13).
19. Remove impeller screw and washer, clean up screw with wire brush and prime with Loctite Primer T.
20. Install impeller gasket (Key No. 12), impeller washer (Key No. 13), stat-o-washer (Key No. 14), and impeller screw (Key No. 15) in that order. Use Loctite #271 to secure impeller screw. Tighten as shown: 3/8” impeller screw to 200 inch-lbs. (2.3 kg-m) torque; 1/2” impeller screw to 450 inch-lbs. (5.2 kg-m) torque.
21. Install new volute gasket (Key No. 9) and slide motor/impeller/bracket assembly into place; bolt up to volute.
    Tighten nuts and lockwashers (Key Nos. 2 and 3) to 450 inch-lbs. (5.2 kg-m) torque.
22. If pump is below water level: Close drains; open system valves to fill pump. If pump is above water level: Fill strainer and prime pump. Open system valve if they were closed at disassembly.
23. When pump is full, close pump and strainer vent plugs.
24. Reconnect power to pump and system is ready for operation.

Repair Parts List
CSPH and
CCSPH (Epoxy Lined)
Energy Efficient Pool Pumps
60 Hz.

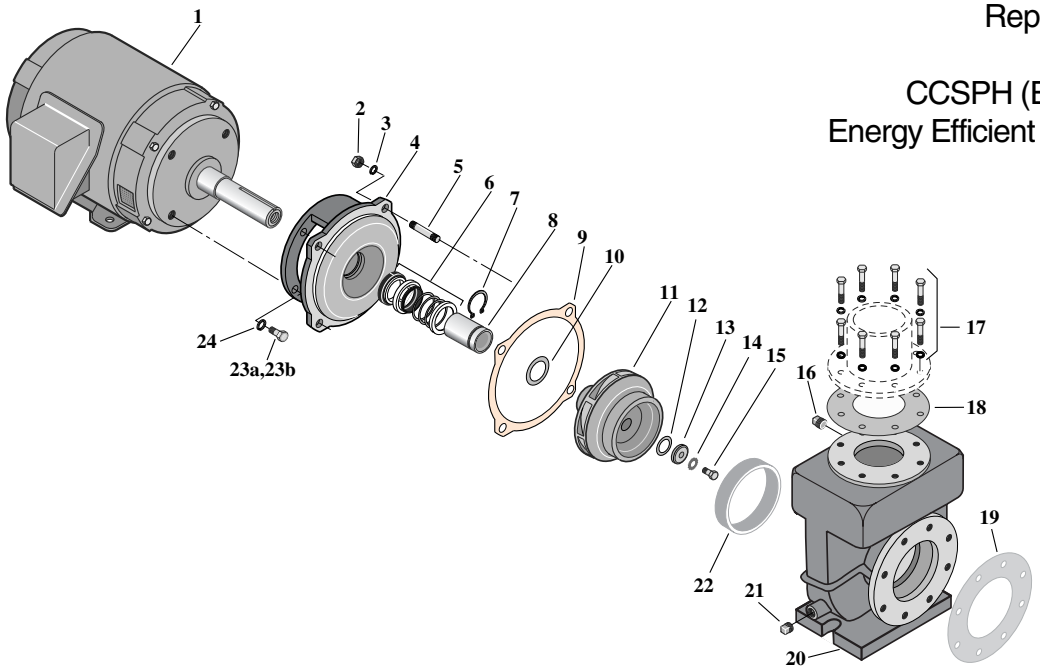

Key No.	Part Description	No. Used	7.5 HP CSPHK-142(1Ph) CCSPHK-142(1Ph) CSPHK3-142(3Ph) CCSPHK3-142(3Ph)	10 HP CSPHL-143(1Ph) CCSPHL-143(1Ph) CSPHL3-143(3Ph) CCSPHL3-143(3Ph)	15 HP CSPHM3-144(3Ph) CCSPHM3-144(3Ph)	20 HP CSPHN3-145(3Ph) CCSPHN3-145(3Ph)
1	Motor, 230V, 1 Phase	1	S22351	62500-0101	–	–
1	Motor, 230/460V, 3 Phase	1	S22353BD	M1105BD	S22357BD-01	S28574BD
2	Nut, 1/2”	4	S23488	S23488	S23488	S23488
3	Lockwasher, 1/2”	4	U43-13SS	U43-13SS	U43-13SS	U43-13SS
4	Bracket (1 Phase - CSPH)	1	L05328	L05328	–	–
4	Bracket (1 Phase - CCSPH)	1	16830-2203	16830-2203	–	–
4	Bracket (3 Phase - CSPH)	1	L05329	L05328	L05328	L05779
4	Bracket (3 Phase - CCSPH)	1	16830-2201	16830-2203	16830-2203	16830-2202
5	Stud, 1/2-13x1-1/2” Long	4	30747-0152	30747-0152	30747-0152	30747-0152
6	Mechanical Shaft Seal	1	S32014	S32014	S32014	S32015
7	Retaining Ring	1	S11207	S11207	S11207	S16767
8	Shaft Sleeve	1	37447-0001L	37447-0001L	37447-0001L	37447-0002L
9	Gasket (Volute to Bracket)	1	S04757	S04757	S04757	S04757
10	Gasket (Impeller to Shaft Sleeve)	1	33455-8044	33455-8044	33455-8044	33455-8046
11	Impeller	1	16830-0209	16830-0210	16830-0211	16830-0212
12	Gasket (Impeller to Washer)	1	33455-8043	33455-8043	33455-8043	33455-8045
13	Impeller Washer	1	38917-0203	38917-0203	38917-0203	38917-0204
14	Stat-O-Seal Washer	1	C43-46SS	C43-46SS	C43-46SS	C43-46SSA
15	Impeller Screw 3/8-16x1” Long	1	S23566	S23566	S23566	–
15	Impeller Screw 1/2-13x1” Long	1	–	–	–	S23619
16	Vent Plug 1/4” NPT	1	U78-57DV	U78-57DV	U78-57DV	U78-57DV
17	Hardware Kit: Includes 8 each 5/8” Capscrews and Lockwashers	1	16830-0400	16830-0400	16830-0400	16830-0400
18	Gasket (Volute Discharge)	1	33450-8042	33450-8042	33450-8042	33450-8042
19	Gasket (Volute Suction)	1	33450-8041	33450-8041	33450-8041	33450-8041
20	Volute (CSPH)	1	16830-0100	16830-0100	16830-0101	16830-0101
20	Volute (CCSPH)	1	16830-2102	16830-2102	16830-2103	16830-2103
21	Drain Plug 1/2” NPT, Brass	1	U78-59D	U78-59D	U78-59D	U78-59D
22	Wear Ring	1	16830-0120	16830-0120	16830-0120	16830-0120
23A	Capscrew 1/2-13x1” Long*	4	S23619	S23619	S23619	S23619
23B	Capscrew 3/8-16x1” Long**	4	S23566	–	–	–
24	Lockwasher 1/2”	4	U43-13SS	U43-13SS	U43-13SS	U43-13SS
24	Lockwasher 3/8”**	4	U43-12SS	–	–	–
•	Nameplate	1	32157-0072	32157-0072	32157-0072	32157-0072
•	Decal	1	U27-404	U27-404	U27-404	U27-404
•	Warning Tag	1	U63-123	U63-123	U63-123	U63-123
•	Tag, Instructions, Rotating Seal	1	U63-13	U63-13	U63-13	U63-13
•	Tag, No Motor Overload**	1	U63-75	U63-75	U63-75	U63-75
•	Decal, Thermal Protection	1	32165-4020	32165-4020	32165-4020	32165-4020
•	Tag, Hazardous Suction	1	61002-0012	61002-0012	61002-0012	61002-0012

• Not illustrated. * 7-1/2HP: 1 Phase only. ** 3 Phase only.

Repair Parts List

CCSPH2 (Epoxy lined) and CSPH2
Energy Efficient 200 Volt, 60 Hz.

CCSPH (Epoxy lined) and CSPH
Super Efficient 208-230/460 Volt, 60 Hz.

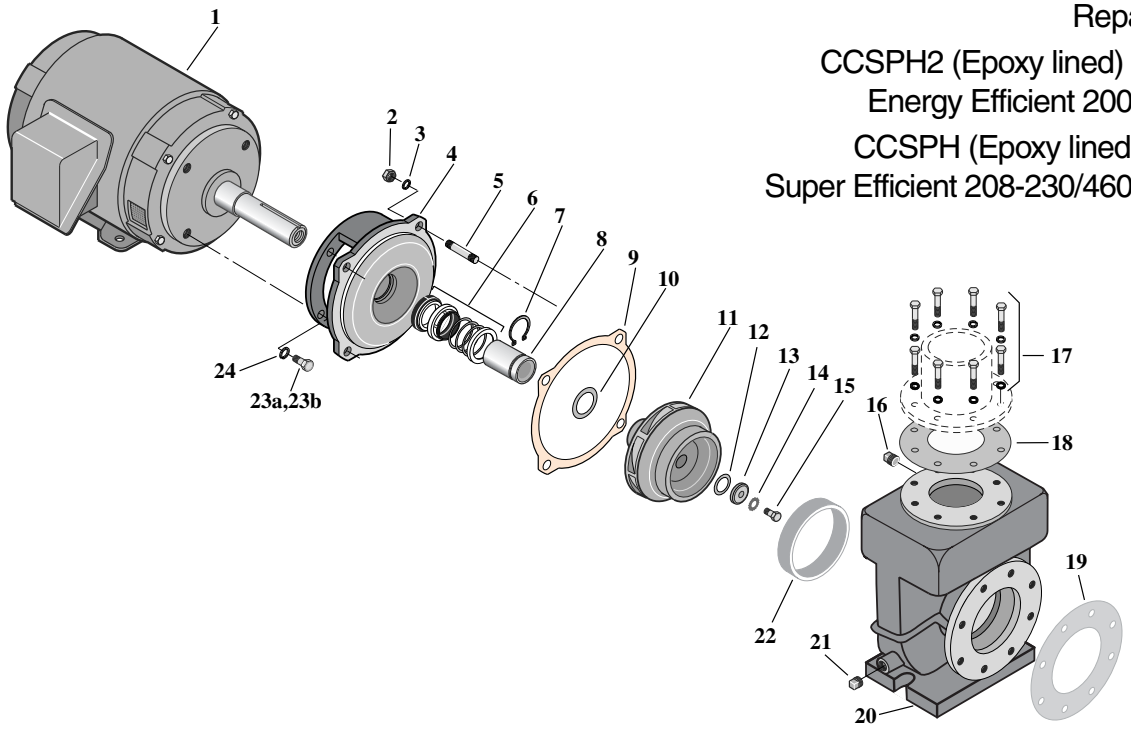

Key No.	Part Description	No. Used	7.5 HP CSPH2K3-142(3Ph) CCSPH2K3-142(3Ph)	10 HP CSPH2L3-143(3Ph) CCSPH2L3-143(3Ph)	15 HP CSPH2M3-144(3Ph) CCSPH2M3-144(3Ph)	20 HP CSPH2N3-145(3Ph) CCSPH2N3-145(3Ph)
1	Motor, (CSPH2 and CCSPH2) 200V	1	16830-0320	16831-0320	16832-0320	16833-0320
2	Nut, 1/2”	4	S23488	S23488	S23488	S23488
3	Lockwasher, 1/2”	4	U43-13SS	U43-13SS	U43-13SS	U43-13SS
4	Bracket (CSPH2)	1	L05329	L05328	L05328	L05779
4	Bracket (CCSPH2)	1	16830-2201	16830-2203	16830-2203	16830-2202
5	Stud, 1/2-13x1-1/2” Long	4	30747-0152	30747-0152	30747-0152	30747-0152
6	Mechanical Shaft Seal	1	S32014	S32014	S32014	S32015
7	Retaining Ring	1	S11207	S11207	S11207	S16767
8	Shaft Sleeve	1	37447-0001L	37447-0001L	37447-0001L	37447-0002L
9	Gasket (Volute to Bracket)	1	S04757	S04757	S04757	S04757
10	Gasket (Impeller to Shaft Sleeve)	1	33455-8044	33455-8044	33455-8044	33455-8046
11	Impeller	1	16830-0209	16830-0210	16830-0211	16830-0212
12	Gasket (Impeller to Washer)	1	33455-8043	33455-8043	33455-8043	33455-8045
13	Impeller Washer	1	38917-0203	38917-0203	38917-0203	38917-0204
14	Stat-O-Seal Washer	1	C43-46SS	C43-46SS	C43-46SS	C43-46SSA
15	Impeller Screw 3/8-16x1” Long	1	S23566	S23566	S23566	–
15	Impeller Screw 1/2-13x1” Long	1	–	–	–	S23619
16	Vent Plug 1/4” NPT	1	U78-57DV	U78-57DV	U78-57DV	U78-57DV
17	Hardware Kit: Includes 8 each 5/8” Capscrews and Lockwashers	1	16830-0400	16830-0400	16830-0400	16830-0400
18	Gasket (Volute Discharge)	1	33450-8042	33450-8042	33450-8042	33450-8042
19	Gasket (Volute Suction)	1	33450-8041	33450-8041	33450-8041	33450-8041
20	Volute (CSPH2)	1	16830-0100	16830-0100	16830-0101	16830-0101
20	Volute (CCSPH2)	1	16830-2102	16830-2102	16830-2103	16830-2103
21	Drain Plug 1/2” NPT, Brass	1	U78-59D	U78-59D	U78-59D	U78-59D
22	Wear Ring	1	16830-0120	16830-0120	16830-0120	16830-0120
23	Capscrew 1/2-13x1” Long	4	S23566*	S23619	S23619	S23619
24	Lockwasher 1/2”	4	–	U43-13SS	U43-13SS	U43-13SS
24	Lockwasher 3/8”	4	U43-12SS	–	–	–
•	Nameplate	1	32157-0072	32157-0072	32157-0072	32157-0072
•	Decal	1	U27-404	U27-404	U27-404	U27-404
•	Warning Tag	1	U63-123	U63-123	U63-123	U63-123
•	Tag, Instructions, Rotating Seal	1	U63-13	U63-13	U63-13	U63-13
•	Tag, No Motor Overload	1	U63-75	U63-75	U63-75	U63-75
•	Decal, Thermal Protection	1	32165-4020	32165-4020	32165-4020	32165-4020
•	Tag, Hazardous Suction	1	61002-0012	61002-0012	61002-0012	61002-0012

• Not illustrated. * Part Number S23566, Capscrew, 3/8-16x1” Long (7.5 HP only).

Repair Parts List 5CSPH and 5CCSPH (Epoxy Lined), ANSI and DIN (with E Suffix) Pool Pumps 50 Hz.

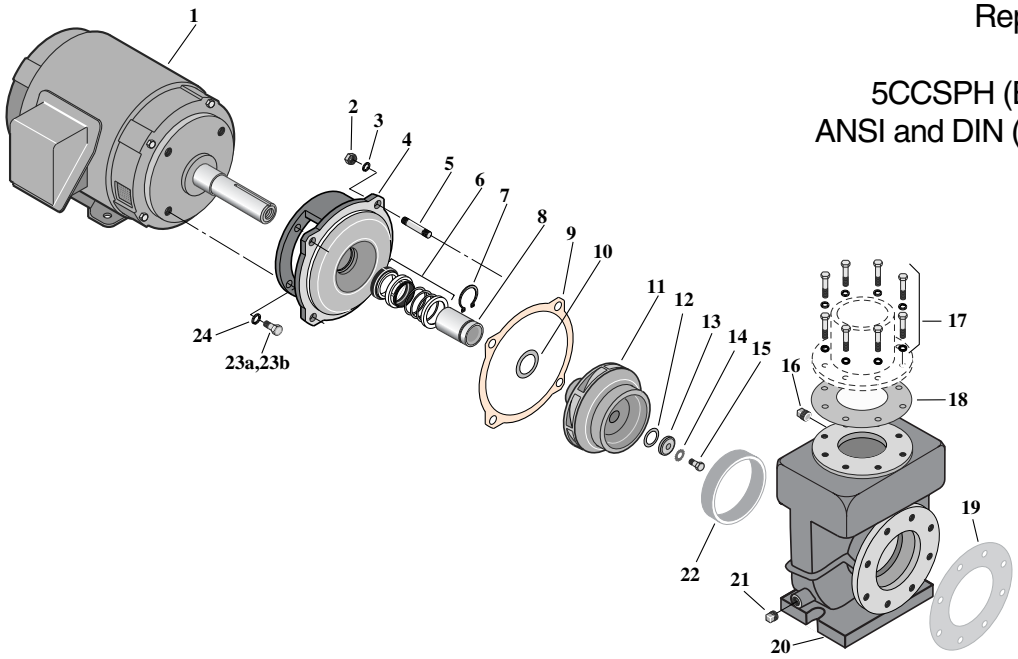

Key No.	Part Description	No. Used	5 HP 5CSPHJ3-142 5CCSPHJ3-142	7.5 HP 5CSPHK3-143 5CCSPHK3-143	10 HP 5CSPHL3-144 5CCSPHL3-144	15 HP 5CSPHM3-145 5CCSPHM3-145
1	Motor, 50Hz 3Ph	1	16830-0280M	16830-0340M	16831-0340M	16832-0340M
2	Nut, 1/2”	4	S23488	S23488	S23488	S23488
3	Lockwasher, 1/2”	4	U43-13SS	U43-13SS	U43-13SS	U43-13SS
4	Bracket (5CSPH)	1	L05329	L05328	L05328	L05779
4	Bracket (5CCSPH)	1	16830-2201	16830-2203	16830-2203	16830-2202
5	Stud, 1/2-13x1-1/2” Long	4	30747-0152	30747-0152	30747-0152	30747-0152
6	Mechanical Shaft Seal	1	S32014	S32014	S32014	S32015
7	Retaining Ring	1	S11207	S11207	S11207	S16767
8	Shaft Sleeve	1	37447-0001L	37447-0001L	37447-0001L	37447-0002L
9	Gasket (Volute to Bracket)	1	S04757	S04757	S04757	S04757
10	Gasket (Impeller to Shaft Sleeve)	1	33455-8044	33455-8044	33455-8044	33455-8046
11	Impeller	1	16830-0209	16830-0210	16830-0211	16830-0212
12	Gasket (Impeller to Washer)	1	33455-8043	33455-8043	33455-8043	33455-8045
13	Impeller Washer	1	38917-0203	38917-0203	38917-0203	38917-0204
14	Stat-O-Seal Washer	1	C43-46SS	C43-46SS	C43-46SS	C43-46SSA
15	Impeller Screw 3/8-16x1” Long	1	S23566	S23566	S23566	–
15	Impeller Screw 1/2-13x1” Long	1	–	–	–	S23619
16	Vent Plug 1/4” NPT	1	U78-57DV	U78-57DV	U78-57DV	U78-57DV
17	Hardware Kit: Includes 8 each 5/8” Capscrews and Lockwashers	1	16830-0400	16830-0400	16830-0400	16830-0400
18	Gasket (Volute Discharge)	1	33450-8042	33450-8042	33450-8042	33450-8042
18	Gasket (Volute Discharge, E-Suffix models)	1	33459-1049	33459-1049	33459-1049	33459-1049
19	Gasket (Volute Suction)	1	33450-8041	33450-8041	33450-8041	33450-8041
19	Gasket (Volute Suction, E-Suffix models)	1	33459-1048	33459-1048	33459-1048	33459-1048
20	Volute (5CSPH)	1	16830-0100	16830-0100	16830-0101	16830-0101
20	Volute (5CCSPH)	1	16830-2102	16830-2102	16830-2103	16830-2103
20	Volute (5CSPH, E-Suffix models)	1	16830-0110	16830-0110	16830-0111	16830-0111
20	Volute (5CCSPH, E-Suffix models)	1	16830-2112	16830-2112	16830-2113	16830-2113
21	Drain Plug 1/2” NPT, Brass	1	U78-59D	U78-59D	U78-59D	U78-59D
22	Wear Ring	1	16830-0120	16830-0120	16830-0120	16830-0120
23A	Capscrew 1/2-13x1” Long	4	S23566	S23619	S23619	S23619
23B	Capscrew 3/8-16x1” Long	4	S23566	–	–	–
24	Lockwasher 1/2”	4	U43-13SS	U43-13SS	U43-13SS	U43-13SS
24	Lockwasher 3/8”	4	U43-12SS	–	–	–
•	Nameplate	1	32157-0072	32157-0072	32157-0072	32157-0072
•	Decal	1	U27-404	U27-404	U27-404	U27-404
•	Warning Tag	1	U63-123	U63-123	U63-123	U63-123
•	Tag, Instructions, Rotating Seal	1	U63-13	U63-13	U63-13	U63-13
•	Tag, No Motor Overload	1	U63-75	U63-75	U63-75	U63-75

• Not illustrated.
Model numbers with suffix ending in “E” do not include Hardware Kit. Order 8 each of Part Numbers 37007-0650 and 38917-0207.

PKG 184 Strainer Repair Parts List
PKG 184C Epoxy Lined Strainer Repair Parts List

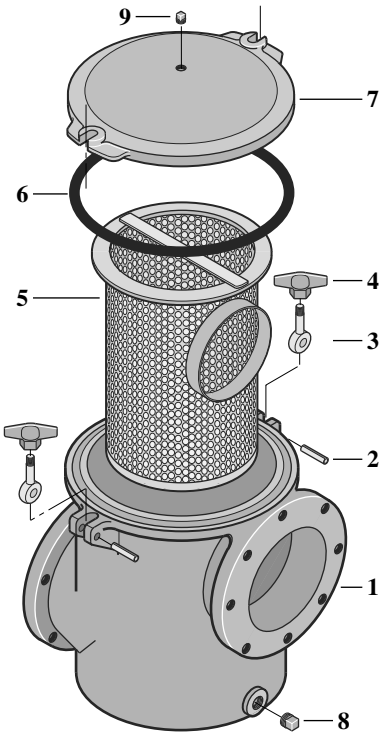

Key No.	Part Description	Qty.	Part Number Standard Flange PKG 184, 184C
1	Strainer Body (PKG 184)	1	16401-0010
1	Strainer Body (PKG 184C)	1	16401-2015
2	Spring Pin	2	35857-0031
3	Toggle Bolt	2	30767-0011
4	Wing Nut	2	35404-0319
5	Strainer Basket	1	16401-0102
6	O-Ring	1	35505-0421
7	Strainer Cover (PKG 184)	1	16401-0210
7	Strainer Cover (PKG 184C)	1	16401-2215
8	Pipe Plug, 1/2” Square Head Brass	1	U78-59D
9	Vent Plug, 1/4” Square Head	1	U78-57DV
•	Gasket, Suction Flange	2	33450-8041
•	Capscrew, M20x2.5, 50 mm Lg., SS	16	—
•	Lockwasher, M20 SS	16	—
•	Tag, Hazardous Suction	1	61002-0012
•	Hardware Kit: Includes 16 each 3/4-10x2” Capscrews and 3/4” Lockwashers (PKG 184, 184C)	1	16830-0401

• Not illustrated.

1620 HAWKINS AVE., SANFORD, NC 27330 • (919) 566-8000
10951 WEST LOS ANGELES AVE., MOORPARK, CA 93021 • (805) 553-5000

WWW.PENTAIR.COM

P/N S248 REV. D 10/13/20