PENTAIR POOL

EQ SERIES®

PUMP STRAINER POT

INSTALLATION AND USER'S GUIDE

CUSTOMER SERVICE / TECHNICAL SUPPORT

Hours: 8:00AM to 7:30PM EST (5:00AM - 4:30PM PST)
Call: (800) 831-7133
Visit: www.pentair.com
Fax: (800) 284-4151

TABLE OF CONTENTS

SECTION I. GENERAL INFORMATION 3
SECTION II. MECHANICAL INSTALLATION AND PRESSURE TESTING 3
SECTION III. INITIAL OPERATION 7
SECTION IV. CLEANING THE STRAINER BASKET 8
SECTION V. REPLACEMENT PARTS 9
SECTION VI. STRAINER POT ASSEMBLY TECHNICAL DATA 10-11

⚠WARNING

Read and follow all warning notices and instructions accompanying this product before installing.
Failure to follow safety warnings and instructions can result in severe injury, death, or property damage.
Call (800) 831-7133 (US) for additional free copies of these instructions.

IMPORTANT NOTICE

Attention Installer: This manual contains important information regarding the install, operation and safe use of this product. This information should be given to the owner/operator of this equipment.

IMPORTANT SAFETY INSTRUCTIONS
READ AND FOLLOW ALL INSTRUCTIONS
SAVE THESE INSTRUCTIONS

SECTION I. GENERAL INFORMATION

This product is intended for use in swimming pool applications only. It may be mounted directly to an EQ Series Pump. This will provide filtration of debris that could damage the pump and will allow the pump to be self-priming in installations up to 10 feet. The exact height at which a pump can prime depends on many installation and environmental factors.

The Strainer Pot Assembly may also be mounted as a separate unit in the suction line of a circulation system.

⚠ CAUTION

If this product is to be attached to an EQ Series Pump you also must read and follow all warning notices and instructions in the pump manual.

SECTION II. MECHANICAL INSTALLATION AND PRESSURE TESTING

A. MECHANICAL INSTALLATION

1. Carefully remove the strainer pot assembly from its shipping package.
2. Determine the installation location of the strainer pot assembly. Ensure that adequate space and lighting is provided for routine maintenance.
3. It is good practice to install a valve on the suction line before this unit and on the return line after the pump so that both items can be isolated for routine maintenance.

⚠ CAUTION

The strainer pot assembly is shipped with the correct screws and O-ring for attaching the strainer pot assembly to the pump. These screws and the O-ring should be discarded and different hardware should be obtained if this unit is to be installed as a separate stand-alone strainer. See the diagram below for installing the strainer pot assembly as a separate stand-alone unit.
Please note that if stainless steel screws and nuts are obtained to make the pipe flange connection that galling may occur making proper tightening of the flange connection impossible. Galling of threads can be resolved by using stainless steel screws and brass nuts.

It will be necessary to obtain the following to connect the strainer pot flange to a 6-inch (15.24 cm) pipe. Double the quantities shown below if the unit is to be installed as a stand-alone unit and two flange connections must be made. **Some local codes may require the use of 3/4-inch fasteners instead of 5/8-inch.**

8	Hex Head Cap Screws, 5/8 in.-11 X 3-1/4 in. Long
16	Washers, Nominal ID 5/8 OD 1-5/16 or larger
8	Hex Nuts
1	Gasket, 1/8-inch (3.2 mm) Thick EPDM or Nitrile Full Face (with holes) for Class 125/150 Flange
1	Flange 6-inch (15.24 cm) ANSI Class 150

4. Carefully plan the layout of adjacent plumbing, including cutting pipe to the exact length and ensuring that flange will be aligned and square with the strainer pot assembly. Note that the strainer must be installed so that water flow travels into the upper flange and out the bottom flange.

   Note: It is best practice to install a straight section of pipe (free of valves or fittings) that is at least 30-inches (76 cm) long on the inlet side of the strainer. If the strainer pot assembly is installed as a stand alone unit, another straight piece of pipe, at least 30-inches (76 cm) long, should be installed to connect the strainer assembly to the pump housing. Glue plumbing in place once you are certain that fit ups are correct.

5. Ensure that the flange gasket is properly positioned between the strainer pot flange and the top flange connection. Use only high quality 1/8-inch (3.2 mm) thick gaskets with holes for the bolts to pass through. It may be necessary to hold the gasket in place with either silicone or two or three drops of cyanoacrylate (super glue). Do not use any other grease or glue as it may contain chemicals that deteriorate the plastic.

Figure 1.

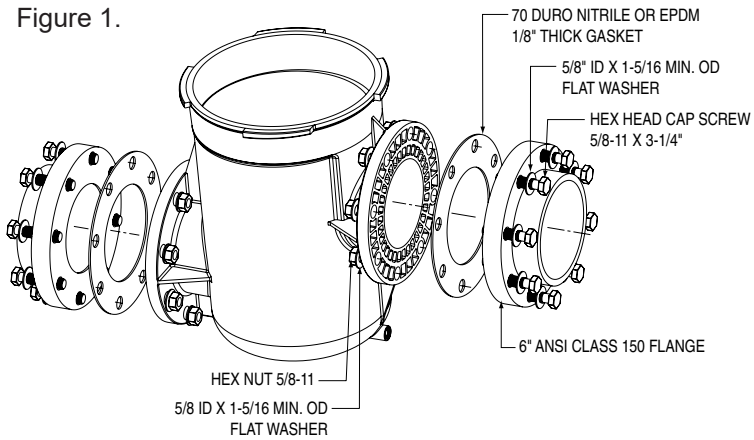

6. Install the flange screws, washers and nuts hand tight on the first flange connection as shown in the diagram.
7. Repeat steps 4, 5 and 6 for the lower flange connection unless the strainer is directly attached to an EQ Series pump.
8. Inspect both flange connection(s) to ensure that the flanges of the strainer pot and the connection flanges are in line and that the faces are parallel. Take any corrective action to properly align flanges before tightening the flange screws to the required torque.

⚠ CAUTION

Use large diameter flat washers (at least 1-5/16 inch outer diameter) between the hex nut and the strainer pot assembly flanges to properly distribute the clamping forces on the flanges. Tighten the flange bolts to 27.1 newton meter (20 ft.-lb.) unless otherwise specified by the flange manufacturer. If it is not possible to use a torque wrench then care should be taken not to over tighten the flange bolts. Failure to follow the above instructions can result in damaging the strainer pot flanges.

⚠ CAUTION

Suction and discharge piping must be supported by an appropriate system of supports or hangers. Inadequately supported pipe can cause excessive loads to be transmitted to the strainer pot assembly resulting in a structural failure that could result in flooding and property damage.

B. PRESSURE TESTING

Certain local codes require that the circulation system be pressure tested with a proof pressure before being commissioned into service or before allowing construction to progress to the next stage.

⚠ CAUTION

The provided pressure relief valve must be installed into the 1/4-inch (0.6 cm) drain opening before the strainer pot is pressure tested if a pressure test is required. This valve is not intended to replace a pressure regulator and cannot relieve the system of pressure if the system rapidly overpressurized during the test. The valve is intended to function as a low volume pressure relief should a gradual increase in pressure occur due to changes in temperature or atmospheric pressure once the test pressure is established.

⚠ WARNING

This product is intended to operate on the suction side of the pump and must not be installed on the pressure side of a circulation system. Caution should be taken during a system pressure test as this product has a lower pressure rating than other components in the system. Exceeding the pressure or temperature rating during the pressure test can result in a structural failure. A structural failure of the strainer pot assembly can cause the instantaneous release of energy causing failed components to be accelerated to high velocities and to travel distances of 100 ft. (30.5 m) or more. These components could cause severe injury or death.

⚠ WARNING

It is important that the four tabs on the locking ring be fully overlapped with the four tabs on the strainer pot before performing a pressure test. If the locking ring is under tightened or over tightened so that the tabs do not fully overlap with tabs on the pot a structural failure can occur. A structural failure can cause severe injury or death.

⚠ WARNING

Improperly pressure testing a circulation system can cause risk of property damage, severe injury, or death. Circulation systems store energy when pressure tested. The instructions below should be considered a guide only. Each installation should be considered a unique situation that should be carefully investigated for risk.

⚠ WARNING

Never test this equipment with air pressure even if specified by the local code. Even low levels of air pressure can result in tremendous storage of energy that can instantaneously be released if a system failure occurs. This release of energy can cause failed components to be accelerated to high velocities and to travel distances of 100 feet (30.5 m) or more. These components could cause severe injury or death.

1. Understand all local codes. Piping typically has higher pressure ratings than other system components such as the pump or filter. Do not pressure test this product unless the code specifically requires this.
2. Verify each component in the system is designed to meet the local code test pressure. Most components should be marked with a maximum operating pressure. If a component is not marked consult the Owner's Manual that came with the component or consult the manufacturer.

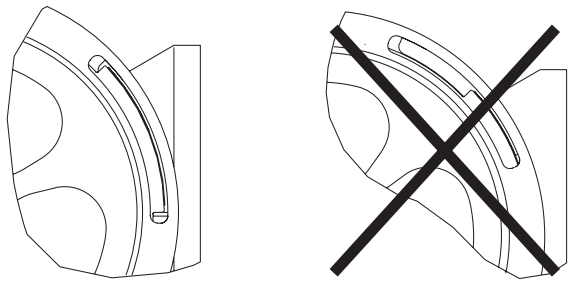

CORRECT
LOCKING RING AND POT TABS FULLY OVERLAP

NO!
LOCKING RING AND POT TABS ARE NOT FULLY OVERLAPPED.

Figure 2.

3. Verify the pressure test is conducted within the operating temperature range listed on the components that make up the circulation system. If no maximum operating temperature is listed, review the owner's manual or contact the manufacturer for this information. It is common practice for plastic components to be pressure rated at 72°F (22°C) and then derated for temperatures greater than this.
4. Use only a high quality pressure gauge that is certified to be accurate for the pressure for which the test is going to be conducted. Do not rely on the provided pressure gauge as it may not be sufficiently accurate to pressure test the system. Please note that the pressure in the system will vary depending on where the pressure is taken due to the weight of the water.
5. Ensure that all air will be evacuated from the system when pressure is applied to the system. This requires all air bleeders to be open. It also may be necessary to remove some lids or covers on system equipment, such as the pump strainer lid, to prevent air from being trapped in the system. In addition, there may be other areas of the circulation system where air may be trapped. Do not introduce pressure to the system until you are certain that air will be totally evacuated.
6. Determine the appropriate location in the system to apply the test water pressure. Consider the place in the system that will best ensure that all air will be displaced when water is introduced.

⚠ WARNING

Never exceed the maximum operating pressure or temperature limits of the system components. Ensure that pressures higher than those required in the pressure test cannot inadvertently be applied to the circulation system. This may require the use of a pressure regulator between the water supply and the circulation system.

Changes in pressure can cause the internal test pressure to increase or decrease over time once the system is isolated. A pressure relief device should be installed that would prevent the pressure from exceeding the intended test pressure. Exceeding these limits could result in a component failing under pressure. The release of energy can cause failed components to be accelerated to high velocities and to travel distances of 100 ft. (30.5 m) or more and could cause severe injury or death.

7. Slowly apply the water pressure and allow the water to flow out all of the openings intended for air to escape. Close the openings beginning at the lowest level first and progressing to the highest level. Do not close any opening until you are sure that air is completely out of that part of the system.
8. Allow the pressure to slowly build once all of the air openings are closed. Close the valve between the water supply and circulation system to isolate the system from the supply pressure.
9. Monitor the system pressure for a few minutes to ensure that it is stabilized.

⚠ WARNING

Due to the potential risk that can be involved it is recommended that the pressure test be kept to the minimum time required by the local code. Do not allow people to work around the system when the circulation system is under pressure test. Post appropriate warning signs and establish a barrier around the pressurized equipment. If the equipment is located in an equipment room, lock the door and post a warning sign.

Never attempt to adjust closures or lids, or attempt to remove or tighten bolts when the system is pressurized. This can result in component separation or failure. The release of energy can cause failed components to be accelerated to high velocities and to travel distances of 100 ft. (30.5 m) or more and could cause severe injury or death.

10. It is normal for the test pressure to drift down slightly during the first few minutes as the circulation system expands under pressure.
11. If the system pressure continues to fall, then bleed off the remaining water pressure in the circulation system and inspect the system for leaks. Look for water on the floor and feel around joints for moisture.
12. Ensure the system is not under pressure before attempting any system adjustments or repairs.
13. Repeat the pressurization sequence once the system leaks have been corrected.

SECTION III. INITIAL OPERATION

Verify that the following tasks are completed before energizing the circulation pump:

1. Make sure the O-ring is on drain plug and that drain plug is tightened hand tight.
2. Fill strainer pot with as much water as it will hold.
3. Position basket correctly in pot.
4. Inspect the O-ring in the lid to make sure that it is clean and properly positioned in the groove.
5. Install the lid into the strainer pot so that the tabs on the lid overlay the tabs on the strainer pot.
6. Secure the lid in place hand tight.

⚠ WARNING

The strainer pot may be at a pressure that is higher or lower than the atmospheric pressure. Always open the drain plug on the strainer pot and allow for the pressure to equalize before removing the locking ring. Attempting to remove the locking ring before the pressure is equalized may result in a rapid exchange of pressure. This instantaneous release of energy can cause components to be accelerated to high velocities and to travel distances of 100 ft. (30.5 m) or more. These components could cause severe injury or death.

⚠ WARNING

DO NOT open the strainer pot if pump fails to prime or if pump has been operating without water in the strainer pot. Pumps operated in these circumstances may experience a build up of vapor pressure and may contain scalding hot water. Opening the strainer pot may cause serious personal injury. In order to avoid personal injury make sure the strainer pot temperature has cooled to room temperature. Carefully remove the drain plug on the strainer pot and allow the pressure to equalize before removing the locking ring.

SECTION IV. CLEANING THE STRAINER BASKET

1. The pump is designed to be maintenance free with the exception of requiring a periodic cleaning of the strainer basket.
2. Routinely inspect the strainer pot for debris while the pump is in operation. Allowing the strainer basket to become blocked will reduce flow, pump efficiency, and may damage the basket or other pump components.
3. Disconnect power to the pump before cleaning the basket.
4. Close isolation valves on the suction and discharge lines if necessary to prevent flooding.

⚠ WARNING

The strainer pot may be at a pressure that is higher or lower than the atmospheric pressure. Always open the drain plug on the strainer pot and allow for the pressure to equalize before removing the locking ring. Attempting to remove the locking ring before the pressure is equalized may result in a rapid exchange of pressure. This instantaneous release of energy can cause components to be accelerated to high velocities and to travel distances of 100 feet (30.5 m) or more. These components could cause severe injury or death.

⚠ WARNING

If the pump has been energized for a period greater than 45 minutes without water flowing through the pump for any reason, the water in the strainer pot may be hot. Attempting to remove the locking ring without removing the drain plug in the pot and allowing the pressure to equalize may result in the hot water rapidly escaping and causing severe injury. To reduce the risk of being injured by hot or scalding water, allow the strainer pot to cool to the ambient temperature before removing the drain plug.

5. Open the drain plug in the strainer pot and allow the pressure to completely stabilize.
6. Remove the locking ring and the clear lid from the strainer pot.
7. Remove the basket and dispose of the debris. Use a water hose and soft brush to remove debris lodged in the basket.
8. Replace the basket making sure it is properly oriented.
9. Make sure the lid O-ring is clean and is properly seated in the lid.
9. Replace the lid by aligning the four tabs with the tabs on the strainer pot.
10. Secure the lid in place hand tight. Do not over tighten as that will make removal difficult.

⚠ WARNING

It is recommended that only water and a soft cloth be used to clean the lid and other pump components. Cleaners may contain chemicals that could damage or weaken pump components causing them to fail and allowing an instantaneous release of energy. This instantaneous release of energy can cause components to be accelerated to high velocities and to travel distances of 100 ft. (30.5 m) or more. These components could cause severe injury or death.

SECTION V. REPLACEMENT PARTS

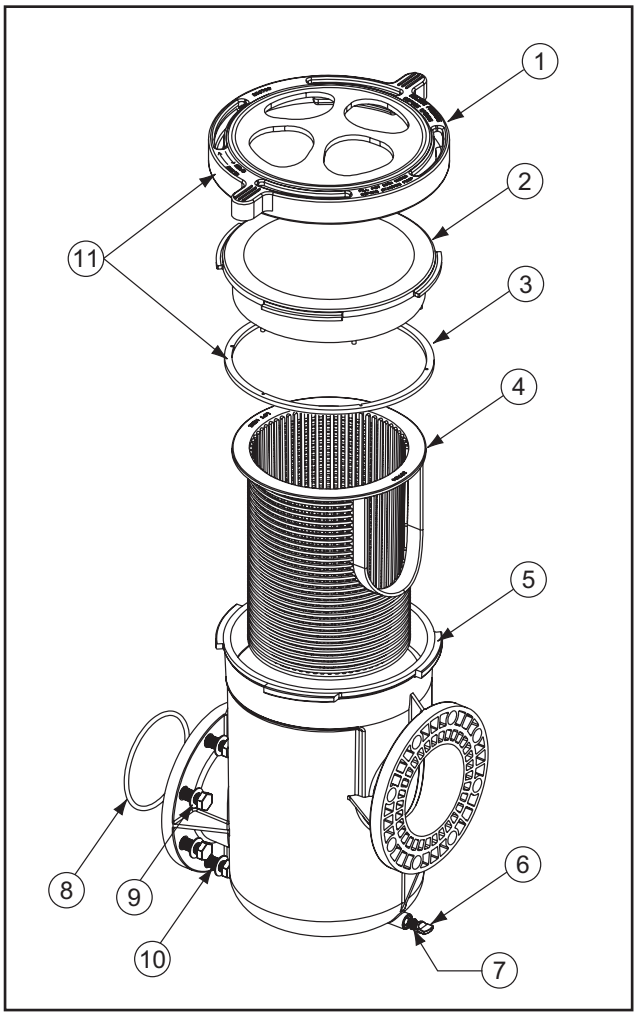

ITEM NUMBER	PART NUMBER	DESCRIPTION
1	356700z	Locking Ring
2	356750z	Lid
3	350166z	Lid Gasket
4	357184	Strainer Basket
5	356725	Strainer Pot
6	357161z	Drain Plug
7	192115z	O-ring, Drain Plug
8	350013z	O-ring, Flange
9	356789z	Flange Washer, Flat (qty. 8)
10	356788z	Flange Bolt (qty. 8)
11	350171z	Locking Ring and Gasket
-	350087z	Pressure Relief Valve 1/4″

SECTION VI. STRAINER POT ASSEMBLY TECHNICAL DATA

A. FRICTION LOSS CURVE

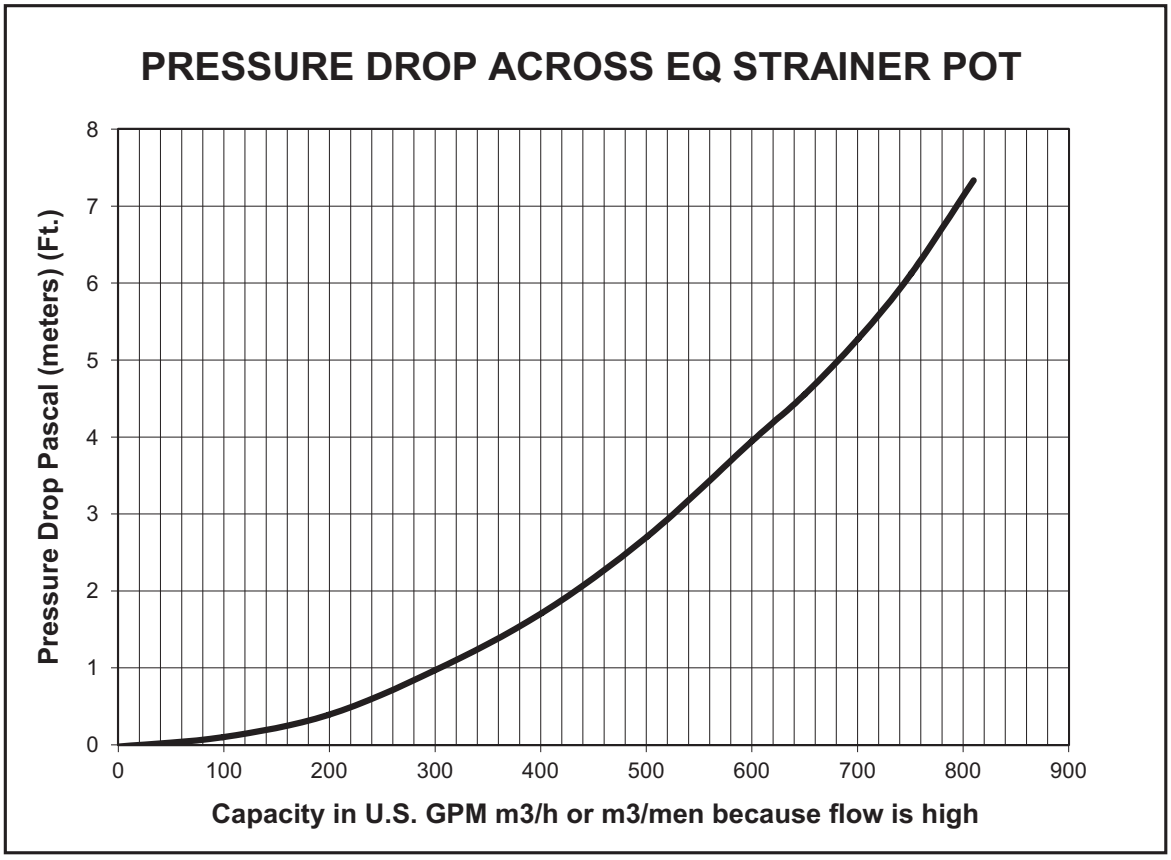

B. ENGINEERING SPECIFICATIONS

Maximum Recommended Design Flow Rate	**800 GPM (181.7 m^3/h)**
Inlet Connection — Opening Diameter	5.6 inches (14.2 cm)
Inlet Connection — Open Area	24.5 square inches (158.1 cm^2)
Basket — Volume	950 cubic inches (15.5 Liters)
Basket — Open Area	98 square inches (632.3 cm^2)
MATERIALS OF CONSTRUCTION:	
Lid	Clear Polycarbonate
Body, Locking Ring, Drain Plug	Fiberglass Reinforced Polyphenylene Oxide
Basket	Mineral Reinforced Polypropylene

C. DIMENSIONAL DATA

2 FASTENERS AND O-RING ARE INCLUDED WITH EQ 6 X 6 STRAINER TO CONNECT STRAINER DIRECTLY TO PENTAIR WATER POOL AND SPA® EQ SERIES® PUMP. IF STRAINER IS TO BE INSTALLED AS A STAND - ALONE UNIT, CONNECT BOTH FLANGES PER NOTE 1.

1 USE ANSI CLASS 150 PLASTIC FLANGE AND 1/8" THICK CLASS 150 FULL FACE GASKET TO MAKE CONNECTION.

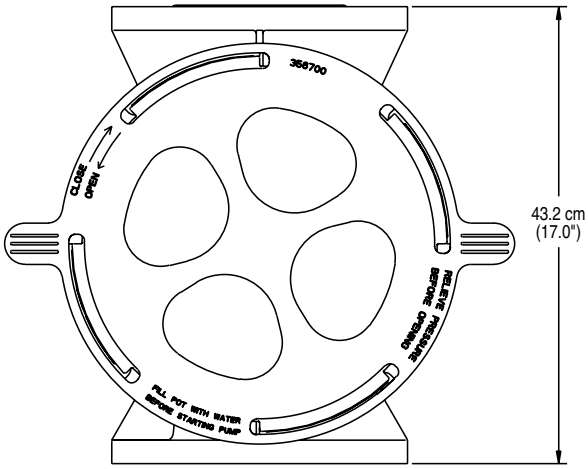

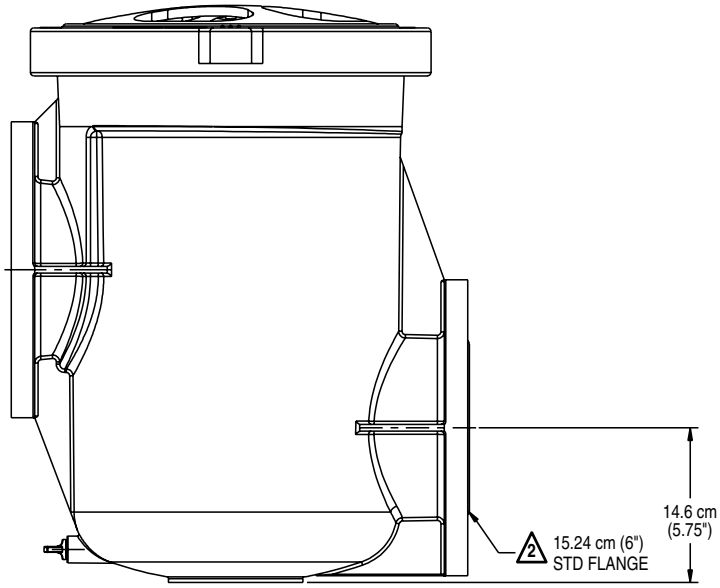

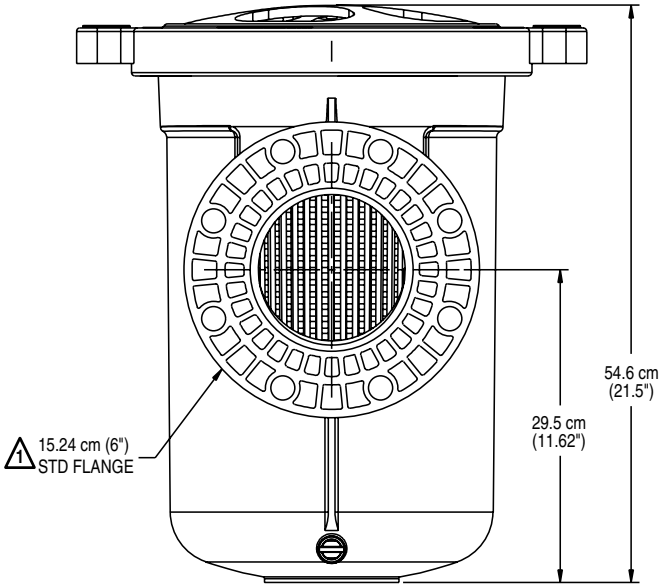

1620 HAWKINS AVE., SANFORD, NC 27330 • 919 566-8000
10951 WEST LOS ANGELES AVE., MOORPARK, CA 93021 • 805 553-5000

All indicated Pentair trademarks and logos are property of Pentair or its global affiliates. Third party registered and unregistered trademarks and logos are the property of their respective owners.

© 2025 Pentair Water Pool and Spa, Inc. All rights reserved. Tous droits réservés. WWW.PENTAIR.COM

P/N 350062 REV. G 10/14/25