INSTALLATION & OPERATION MANUAL

Gas-Fired Pool and Spa Heater

Bronze ASME and Polymer Atmospheric Heat Exchanger Models: 206A, 266A, 336A and 406A

NOTICE

SCAN WITH QR EQUIPPED SMART DEVICE FOR ONLINE MANUAL.

HLW
BR models only

⚠WARNING: If the information in the instructions is not followed exactly, a fire or explosion may result causing property damage, personal injury or death.

- Do not store or use gasoline or other flammable vapors and liquids or other combustible materials in the vicinity of this or any other appliance. To do so may result in an explosion or fire.

- WHAT TO DO IF YOU SMELL GAS

- **Do not try to light any appliance.**
- **Do not touch any electrical switch; do not use any phone in your building.**
- **Immediately call your gas supplier from a neighbor's phone. Follow the gas supplier's instructions.**
- **If you cannot reach your gas supplier, call the fire department.**

- Installation and service must be performed by a qualified installer, service agency or the gas supplier.

This manual should be maintained in legible condition and kept adjacent to the heater or in a safe place for future reference.

Effective:08-24-26
Replaces: 05-15-26
P/N: 241236 Rev. 50

QUICK START GUIDE

CLEARANCES

- ☐ Space required: See page **12**.
- ☐ Minimum and service clearances: See page **7** for clearances table. Note that local codes prevail.

PIPING

- ☐ Pressure relief valve: See page **20** for recommended PRV orientation.
- ☐ Flow rates: See page **17** for flow rate values.

GAS

- ☐ Distance to regulator (pipe lengths) and gas inlet sizes: See page **17**.
- ☐ Required pressure for Natural Gas:
  Min = 6" WC, Max = 10.5" WC
- ☐ Required pressure for Propane Gas:
  Min = 12" WC, Max = 13" WC
- ☐ Sediment trap is required for all installations.
  See page **15**.

WATER CHEMISTRY

- ☐ Water chemistry requirements: See page **5**.

POWER

- ☐ Supply voltage: See page **23** for acceptable input voltages.

VENTING

- ☐ Materials: See page **11** and page **14**.
- ☐ D-2 Power Vent Kit: See page **14**.
- ☐ Indoor Stack: See page **11**.

CONTROLS INTERFACE

- ☐ Wiring diagrams: See page **24**.
- ☐ User interface: See page **25**.
- ☐ Remote operation: See page **29**.

TABLE OF CONTENTS

1. WARNINGS 4
Pay Attention to These Terms 4

2. WATER CHEMISTRY 5
Automatic Chlorinators/Chemical Feeders..... 5

3. BEFORE INSTALLATION..... 6
Receiving equipment..... 6
Rating and certifications..... 6
Elevation 7
Ambient Temperature Rating 7

4. INSTALLATION..... 7
Installation Codes..... 7
Clearances 7
Outdoor Heater Installation 8
Combustion and Ventilation Air 11
Vent Piping 14
D-2 Power Vent Kit..... 14
Gas Supply Connections..... 15
Flow Rate 17
ProTek Shield Assembly..... 18
Unitherm Governor Operation..... 19
Internal Automatic Bypass Valve..... 19
External Auxiliary Bypass Valve 19
Auxiliary Bypass Valve Adjustment 20
Pressure Relief Valve Installation..... 20
Heat Exchanger Reversal 20
Plumbing Diagrams..... 21

5. ELECTRICAL WIRING..... 22
Digital Models ("E" suffix)..... 22
Electrical Power Draw 23
Transformer Wiring 23

6. WIRING DIAGRAM - DIGITAL 24

7. CONTROLS..... 25
Control Panel Removal 25
Control Adjustments – Digital Models 25
Operation 26
Status and Diagnostics 27
Remote Wiring - Digital Models Only 29

8. OPERATING INSTRUCTIONS..... 35
Before Start-Up 35
Start-Up Procedures 35
Visual inspection 35
Water Pressure Switch..... 35

9. MAINTENANCE AND CARE..... 37
Cold Weather Operation 37

10. TROUBLESHOOTING 38
Digital - Flow Chart..... 40
Control Logic - Flow Chart - Digital 41

11. REPLACEMENT PARTS 42

12. ILLUSTRATED PARTS LIST..... 43

THIS INSTALLATION MANUAL MAY NOT BE THE LATEST REVISION PRINTED AT THE TIME OF PRODUCT SHIPMENT. VISIT THE RAYPAK WEBSITE TO VERIFY THE MANUAL DELIVERED WITH YOUR RAYPAK UNIT IS THE MOST UP-TO-DATE VERSION.

1. WARNINGS

Pay Attention to These Terms

⚠DANGER	Indicates the presence of immediate hazards which will cause severe personal injury, death or substantial property damage if ignored.
⚠WARNING	Indicates the presence of hazards or unsafe practices which could cause severe personal injury, death or substantial property damage if ignored.
⚠CAUTION	Indicates the presence of hazards or unsafe practices which could cause minor personal injury or product or property damage if ignored.
CAUTION	CAUTION used without the warning alert symbol indicates a potentially hazardous condition which could cause minor personal injury or product or property damage if ignored.
NOTE	Indicates special instructions on installation, operation, or maintenance which are important but not related to personal injury hazards.

⚠DANGER: Failure to install the drafthood on indoor installation and properly vent the heater to the outdoors as outlined in the venting section of this manual can result in unsafe operation of the heater. To avoid the risk of fire, explosion, or asphyxiation from carbon monoxide, never operate this heater unless it is properly vented and has an adequate air supply for proper operation. Be sure to inspect the vent system for proper installation at initial start-up, and at least annually thereafter. Refer to the venting section of this manual for more information regarding vent system inspections.

⚠WARNING: To minimize the possibility of improper operation, serious personal injury, fire, or damage to the heater:

- **Always keep the area around the heater free of combustible materials, gasoline, and other flammable liquids and vapors.**
- **Heater should never be covered or have any blockage to the flow of fresh air to the heater.**

⚠WARNING: This unit contains refractory ceramic fiber (RCF) insulation in the combustion chamber. RCF, as manufactured, does not contain respirable crystalline silica. However, following sustained exposure to very high-temperatures [>2192°F (1200°C)], the RCF can transform into crystalline silica (cristabolite). The International Agency for Research on Cancer (IARC) has classified the inhalation of crystalline silica (cristabolite) as carcinogenic to humans.

When removing the burners or heat exchangers, take precautions to avoid creating airborne dust and avoid inhaling airborne fibers. When cleaning spills, use wet sweeping or High Efficiency Particulate Air (HEPA) filtered vacuum to minimize airborne dust. Use feasible engineering controls such as local exhaust ventilation or dust collecting systems to minimize airborne dust. Wear appropriate personal protective equipment including gloves, safety glasses with side shields, and appropriate NIOSH-certified respiratory protection, to avoid inhalation of airborne dust and airborne fiber particles.

⚠WARNING: Improper installation, adjustment, alteration, service, or maintenance can cause property damage, personal injury or loss of life. Installation and service must be performed by a qualified installer, service agency, or the gas supplier.

⚠WARNING: Gasoline, as well as other flammable materials and liquids (adhesives, solvents, etc.), and the vapors they produce, are extremely dangerous. Do not handle, use, or store gasoline or other flammable or combustible materials in the vicinity of a heater.

⚠WARNING: Both natural gas and propane have an odorant added to aid in detecting a gas leak. Some people may not physically be able to smell or recognize this odorant. If you are unsure or unfamiliar with the smell of natural gas or propane, ask your local gas supplier. Other conditions, such as "odorant fade," which causes the odorant to diminish in intensity, can also hide, camouflage, or otherwise make detecting a gas leak by smell more difficult.

⚠WARNING: UL-recognized fuel gas detectors are recommended in all enclosed propane and natural gas applications wherein there is a potential for an explosive mixture of fuel gas to accumulate and their installation should be in accordance with the detector manufacturer's recommendations and/or local laws, rules, regulations, or customs.

⚠WARNING: Do not install within 3 feet (0.9 m) of a heat pump or an outdoor condensing unit. Strong air intake from this type of equipment can disturb the combustion process and cause damage or personal injury.

⚠WARNING: The heater shall not be located in an area where water sprinklers, or other devices, may cause water to spray through the cabinet louvers and into the heater. This could cause internal rusting or damage electrical components. Such damage is not covered under warranty.

⚠CAUTION: Elevated water temperature can be hazardous. The U.S. Consumer Product Safety Commission has these guidelines:

1. **Spa water temperatures should never exceed 104°F (40°C). A temperature of 100°F (38°C) is considered safe for a healthy adult. Special caution is suggested for young children.**
2. **Drinking of alcoholic beverages before or during spa or hot tub use can cause drowsiness which could lead to unconsciousness and subsequently result in drowning.**
3. **Pregnant Women Beware! Soaking in water over 102°F (39°C) can cause fetal damage during the first three months of pregnancy resulting in the birth of a brain-damaged or deformed child. Pregnant women should stick to the 100°F (38°C) maximum rule.**
4. **Before entering the spa or hot tub, users should check the water temperature with an accurate thermometer; spa or hot tub thermostats may err in regulating water temperatures by as much as 4°F (2.2°C).**
5. **Persons with a medical history of heart disease, circulatory problems, diabetes, or blood pressure problems should obtain a physician's advice before using pools or hot tubs.**
6. **Persons taking medications which induce drowsiness, such as tranquilizers, antihistamines, or anticoagulants, should not use spas or hot tubs.**

⚠CAUTION: Propane gas is heavier than air and will settle on the ground. Since propane can accumulate in confined areas, extra care should be exercised when lighting propane heaters.

NOTE: It is recommended that the pump be run at least 5 minutes after the heater has been turned off. This helps in taking away residual heat from the heat exchanger, thus prevents the safety hi-limits from tripping due to residual heat after the heater is turned off.

WARNING: Risk of fire. It is recommended that CO monitor and fire alarm be utilized in rooms that contain gas fired appliances.

2. WATER CHEMISTRY

NOTE: Damage due to poor water chemistry is not a warrantable defect.

Chemical imbalance can cause severe damage to your heater and associated equipment. Maintain your water chemistry according to **Table A**. If the mineral content and dissolved solids in the water become too high, scale forms inside the heat exchanger tubes, reducing heater efficiency and damaging the heater. If the pH drops below 7.2, this will cause corrosion of the heat exchanger and severely damage the heater. **Heat exchanger damage resulting from chemical imbalance is not covered by the warranty.**

For your health and the protection of your pool equipment, it is essential that your water be chemically balanced. The following levels must be used as a guide for balanced water.

⚠CAUTION: Free chlorine must not exceed 5 ppm which can damage the heater and is not covered under warranty.

- Occasional chemical shock dosing of the pool or spa water should not damage the heater providing the water is balanced.
- Automatic chemical dosing devices and salt chlorinators are usually more efficient in heated water, unless controlled, they can lead to excessive chlorine level which can damage your heater.
- Check valve should be installed between the heater outlet and a chlorinator or other chemical dosing device.
- Further advice should be obtained from your pool or spa builder, accredited pool shop, or chemical supplier for the correct levels for your water.

Automatic Chlorinators and Chemical Feeders

All chemicals must be introduced and completely diluted into the pool or spa water before being circulated through the heater. Do not place sanitizing chemicals in the skimmer. High chemical concentrations will result when the pump is not running (e.g. overnight).

Recommended Level(s)	Fiberglass Pools	Fiberglass Spas	Other Pool and Spa Types
Water Temperature	68-88°F (20-31°C)	89-104°F (31-40°C)	68-104°F (20-40°C)
pH	7.3-7.4	7.3-7.4	7.6-7.8
Total Alkalinity (ppm)	120-150	120-150	80-120
Calcium Hardness (ppm)	200-300	150-200	200-400
Salt (ppm)	4500 Maximum	4500 Maximum	4500 Maximum
Free Chlorine (ppm)*	2-3	2-3	2-3
Total Dissolved Solids (ppm)	3000 Maximum**	3000 Maximum**	3000 Maximum**

*Free Chlorine **MUST NOT EXCEED 5 ppm!**
**In saltwater chlorinated pools, the total TDS can be as high as 6000 ppm.

Table A. Pool Water Chemistry

Chlorinators must feed downstream of the heater and have an anti-siphoning device to prevent chemical backup into the heater when the pump is shut off.

See **"Plumbing Diagrams" on page 21**.

NOTE: High chemical concentrates from feeders and chlorinators that are out of adjustment will cause rapid corrosion to the heat exchanger. Such damage is not covered under the warranty.

3. BEFORE INSTALLATION

Receiving Equipment

The manufacturer recommends that this manual be reviewed thoroughly before installing the pool/spa heater. If there are any questions that this manual does not answer, please contact the factory or your local representative.

On receipt of your equipment visually check for external damage to the carton. If the carton is damaged, a note should be made on the Bill of Lading when signing for the equipment. Remove the heater from the carton. If it is damaged, report the damage to the carrier immediately. Save the carton.

These items are shipped inside a box in the carton with the heater:

Standard Unit (POLYMER HEADERS)

1. “Pagoda” top
2. 2" CPVC union half with "O" rings (2)
3. Plastic pipe finish flange for gas line
4. Bonding lug with mounting screw (Digital) models only)

ASME Unit (BRONZE HEADERS)

1. “Pagoda” top
2. 2" CPVC union half with "O" rings (2)
3. Plastic pipe finish flange for gas line
4. Bonding lug with mounting screw (Digital models only)
5. Pressure Relief Valve (PRV)
6. Protek Shield™ Adapter with Protek Shield Assy, O-ring and wing nut

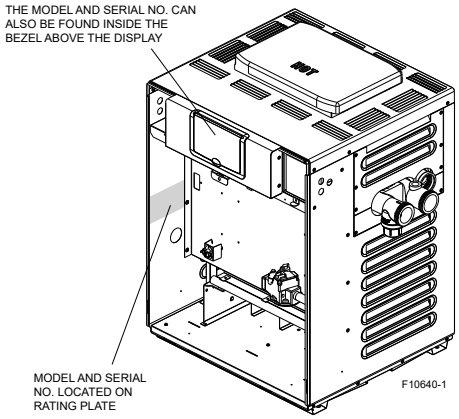

Figure 1. Rating Plate Location

Be sure that you receive the number of packages indicated on the Bill of Lading.

Model Identification Number

The model number of a boiler can be found on the Sales Order and the boiler's rating plate. The example below identifies what the characters of the model number represent.

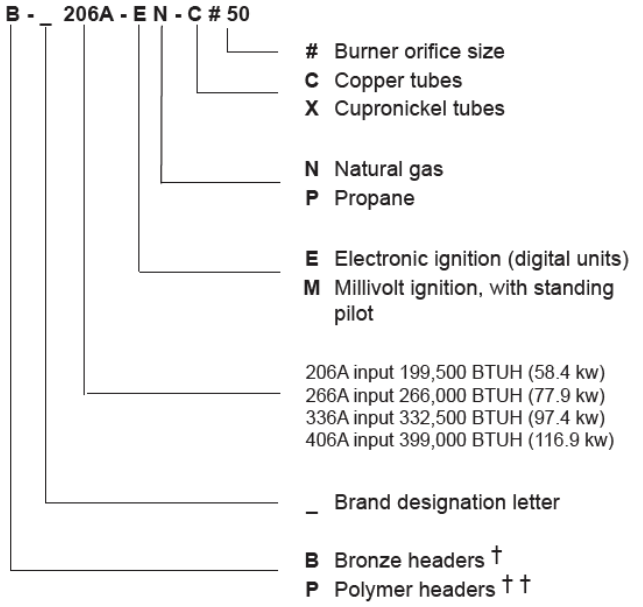

† For commercial installations, ASME-Certified.

† † Units with polymer headers do not meet building code requirements for commercial installations. Consult local code authorities before using any unit with polymer headers in a commercial environment.

When ordering parts, you must specify the model and serial numbers of the heater. See example below for location of serial number. When ordering under warranty conditions, you must also specify date of installation.

Rating and Certifications

These heaters are design-certified and tested under the latest requirements of the ANSI Z21.56 / CSA 4.7 Standard for Gas-Fired Pool Heaters. All heaters can be used either indoor or outdoors when appropriate venting is installed.

The appropriate top designated for each type of use is required. If necessary, the top can be changed at a later date to change from outdoor to indoor or vice versa.

All Bronze header units have heat exchangers which are ASME-certified (BPV Section IV part HLW) and are registered with National Board.

Elevation

Rated inputs are suitable for up to 2,000 ft (610 m) elevation. For elevations above 2,000 ft (610 m), reduce input 4% for each 1,000 ft (305 m) above sea level, as high elevation reduces combustion performance.

Ambient Temperature Rating

Heater Components

Electronic Ignition Heater* -32°F to 175°F (-35°C to 79°C)

*Requires 120 or 240VAC, 1 Ph, 60 Hz Power Supply

4. INSTALLATION

⚠WARNING: This unit contains refractory ceramic fiber (RCF) insulation in the combustion chamber. RCF, as manufactured, does not contain respirable crystalline silica. However, following sustained exposure to very high-temperatures (>2192°F), the RCF can transform into crystalline silica (cristabolite). The International Agency for Research on Cancer (IARC) has classified the inhalation of crystalline silica (cristabolite) as carcinogenic to humans.

When removing the burners or heat exchangers, take precautions to avoid creating airborne dust and avoid inhaling airborne fibers. When cleaning spills, use wet sweeping or High Efficiency Particulate Air (HEPA) filtered vacuum to minimize airborne dust. Use feasible engineering controls such as local exhaust ventilation or dust collecting systems to minimize airborne dust. Wear appropriate personal protective equipment including gloves, safety glasses with side shields, and appropriate NIOSH-certified respiratory protection, to avoid inhalation of airborne dust and airborne fiber particles.

IMPORTANT NOTICE: These instructions are intended only for the use by qualified personnel, specifically trained and experienced in the installation of this type of heating equipment and related system components. Installation and service personnel may be required by some states to be licensed. If your state is such, be sure your contractor bears the appropriate license. Persons not qualified shall not attempt to fix the equipment nor attempt repairs according to these instructions.

⚠WARNING: Improper installation, adjustment, alteration, service or maintenance may damage the equipment, creating a hazard resulting in asphyxiation, explosion or fire. Such damage is not covered under warranty.

NOTE: The heater should not be located in an area where possible water leakage will result in damage to the area adjacent to the heater or to the structure. When such locations cannot be avoided, it is recommended that a suitable drain pan, with adequate drainage, be installed under the heater. The pan must not restrict combustion air flow.

RECOMMENDATION: For regions with snow, Raypak recommends installing these units indoors.

Installation Codes

Installation must be in accordance with local codes, or, in the absence of local codes, with the latest edition of the National Fuel Gas Code, ANSI Z223.1/NFPA54 and National Electrical Code, ANSI/NFPA 70, and for Canada, the latest edition of CAN/CSA-B149 Installation Codes, and Canadian Electrical Code, CSA C22.1 Part 1 and Part 2.

Clearances

All Heaters

For indoor and outdoor clearances from combustible surfaces, see the chart below.

Location	Indoor Installation
Top *	30" (762 mm) Drafthood
Front	Alcove (Open)
Vent	6" (152 mm)
Floor **	0"
Back	6" (152 mm)
Right-Side	12" (305 mm) Water Side
Left-Side	6" (152 mm) Opposite Water Side

Location	Outdoor Installation
Top *	Unobstructed (Outdoor Stack)
Top ***	36" (914 mm) (Stackless Top)
Floor	0"
Back	6" (152 mm)
Right-Side	12" (305 mm) Water Side
Left-Side	6" (152 mm) Opposite Water Side

* Clearance from top of vent terminal
** Do not install on carpeting
*** Clearance from top of heater

Table B. Minimum Clearances from Combustible Surfaces

When installed according to the listed minimum clearances from combustible construction, the pool heater can still be serviced without removing permanent construction around the heater.

However, for ease of servicing, we recommend a clearance of at least 24" (610 mm) in the front, and at least 18" (457 mm) on the water connection side. This will enable the heater to be serviced in its installed location, that is, without movement or removal of the heater.

Description	Location	Distance in. (mm)
a. 3-1/2" (89 mm) thick masonry walls without ventilated air space	Back	9 (229)
	Right	9 (229)
	Left	9 (229)
	Vent	5 (127)
	Indoor Top	39 (991)
	Outdoor Top	Unobstructed
b. 1/2" (13 mm)insulation board over 1" (25 mm) glass fiber or mineral wool batts	Back	6 (152)
	Right	6 (152)
	Left	6 (152)
	Vent	3 (76)
	Indoor Top	30 (762)
	Outdoor Top	Unobstructed
c. 0.024" sheet metal over 1" (25 mm) glass fiber or mineral wool batts reinforced with wire on rear face with ventilated air space	Back	4 (102)
	Right	4 (102)
	Left	4 (102)
	Vent	3 (76)
	Indoor Top	24 (610)
	Outdoor Top	Unobstructed
d. 3-1/2" (89 mm) thick masonry wall with ventilated air space	Back	6 (152)
	Right	6 (152)
	Left	6 (152)
	Vent	6 (152)
	Indoor Top	39 (991)
	Outdoor Top	Unobstructed
e. 0.024" sheet metal with ventilated air space	Back	4 (102)
	Right	4 (102)
	Left	4 (102)
	Vent	2 (51)
	Indoor Top	24 (610)
	Outdoor Top	Unobstructed
f. 1/2" (13 mm) thick insulation board with ventilated air space	Back	4 (102)
	Right	4 (102)
	Left	4 (102)
	Vent	3 (76)
	Indoor Top	24 (610)
	Outdoor Top	Unobstructed
g. 0.024" sheet metal with ventilated air space over 0.024 sheet metal with ventilated air space.	Back	4 (102)
	Right	4 (102)
	Left	4 (102)
	Vent	3 (76)
	Indoor Top	24 (610)
	Outdoor Top	Unobstructed
h. 1" (25 mm) glass fiber or mineral wool batts sandwiched between two sheets 0.024 sheet metal with ventilated air space	Back	4 (102)
	Right	4 (102)
	Left	4 (102)
	Vent	3 (76)
	Indoor Top	24 (610)
	Outdoor Top	Unobstructed

Derived from National Fuel Gas Code, Table 10.2.3

Table C. Reduction of Clearances to Protected Surfaces

Clearances less than these may require removal of the heater to service either the heat exchanger or the burner tray. In either case, the heater must be installed in a manner that will enable the heater to be serviced without removing any structure around the heater.

Flooring

This heater can be installed on combustible flooring. The combustible clearances listed can be reduced by protecting the exposed combustible surfaces as shown in **Table C.**

Outdoor Heater Installation

These heaters are design-certified for outdoor installation, when equipped with the approved tops designated for outdoor use.

⚠WARNING: The heater shall not be located in an area where water sprinklers, or other devices, may cause water to spray through the cabinet louvers and into the heater. This could cause internal rusting or damage electrical components. Such damage is not covered under warranty.

⚠WARNING: Do not install within 3' (0.9 m) of a heat pump or an outdoor condensing unit. Strong air intake from this type of equipment can disturb the combustion process and cause damage or personal injury.

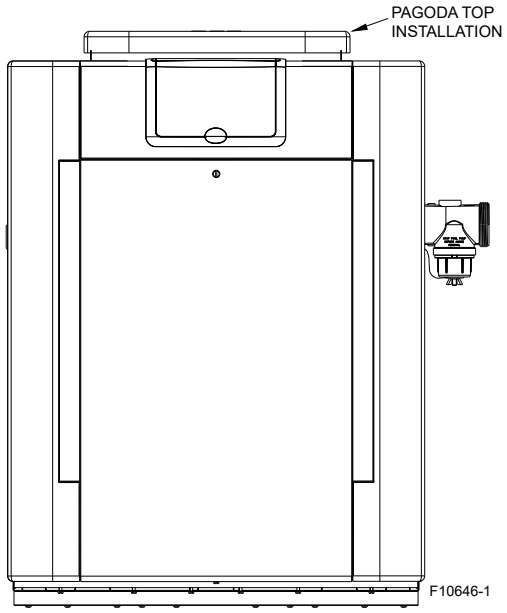

Figure 2. Heater with Outdoor Stackless Top

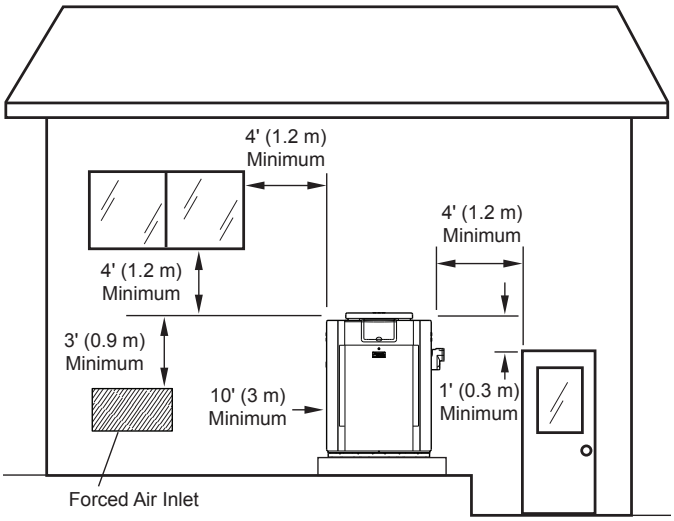

Figure 3. Minimum Distances to Building Openings from Where Flue Products Exit the Boiler

Heaters must not be installed under an overhang of less than 3' (0.9 m) from the top of the heater. Three sides must be open in the area under the overhang. Roof water drainage must be diverted away from the heaters installed under overhangs with the use of gutters.

For U.S. installations, the point from where the flue products exit the heater must be a minimum of 4' (1.2 m) below, 4' (1.2 m) horizontally from, or 1' (0.3 m) above any door, window or gravity inlet into any building. The top surface of the heater shall be at least 3' (0.9 m) above any forced air inlet, or intake ducts located within 10' (3 m) horizontally.

For Canadian installations, pool heaters shall not be installed with the top of the vent assembly within 10' (3 m) below, or to either side, of any opening into the building. Refer to the latest revisions of CAN/CSA-B149.

A minimum of 6' (1.8 m) is required from the heater to an inside corner wall for proper outdoor venting.

Pagoda Top Installation

1. Insert tabs into keyhole (4 places). See **Figure 4**, detail A.
2. Snap tabs into keyholes so as not to pull out. See **Figure 4**, detail B.

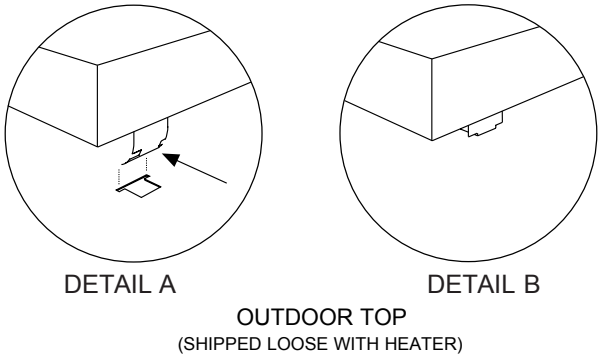

Figure 4. Outdoor Top Installation

For installations in Florida and Texas, that must comply with the Florida or Texas Building Code, follow the directions shown in **Figure 5** for the installation of hurricane tie-down brackets for all models.

Indoor Heater Installation

The heater is also design-certified for indoor installation when equipped with the approved drafthood and a code-compliant vent stack.

For Canada, indoor installation is restricted to an enclosure that is not occupied and does not directly communicate with an occupied area. Refer to the latest edition of CAN/CSA-B149 for specific requirements. Locate heater as close as is practical to a chimney or gas vent. Heater must always be vented to the outside. See section **"Vent Piping" on page 14** for details. Minimum allowable space is shown on the nameplate.

⚠WARNING: Indoor heaters require a drafthood that must be connected to a vent pipe and properly vented to the outside. Failure to follow this procedure can cause fire or fatal carbon monoxide poisoning.

Figure 5. Hurricane Tie-Down Bracket Installation

Base Riser (for Canada only)

For all Canada installations, the unit must be installed on a base riser that is shipped along with the unit. This is in accordance with ANSI-Z21.56. See IPL for replacement kit information on page 52 (Item 14-S).

INSTRUCTIONS FOR THE STATE OF FLORIDA
AND FOR AREAS OF TEXAS DESIGNATED BY
THE TEXAS DEPARTMENT OF INSURANCE

WIND SPEED = 150 MPH, 3 SECOND GUST
EXPOSURE = C

Model	B in. (mm)
206A	20 (508)
266A	23 (584)
336A	26 (660)
406A	29 (737)

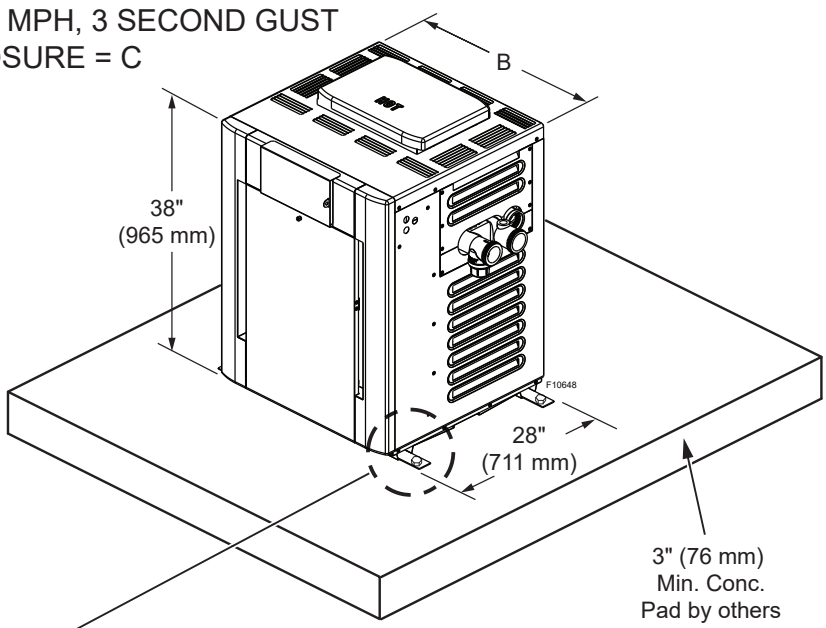

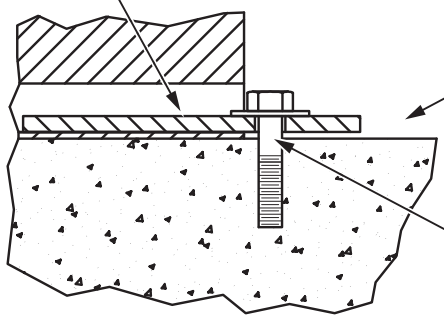

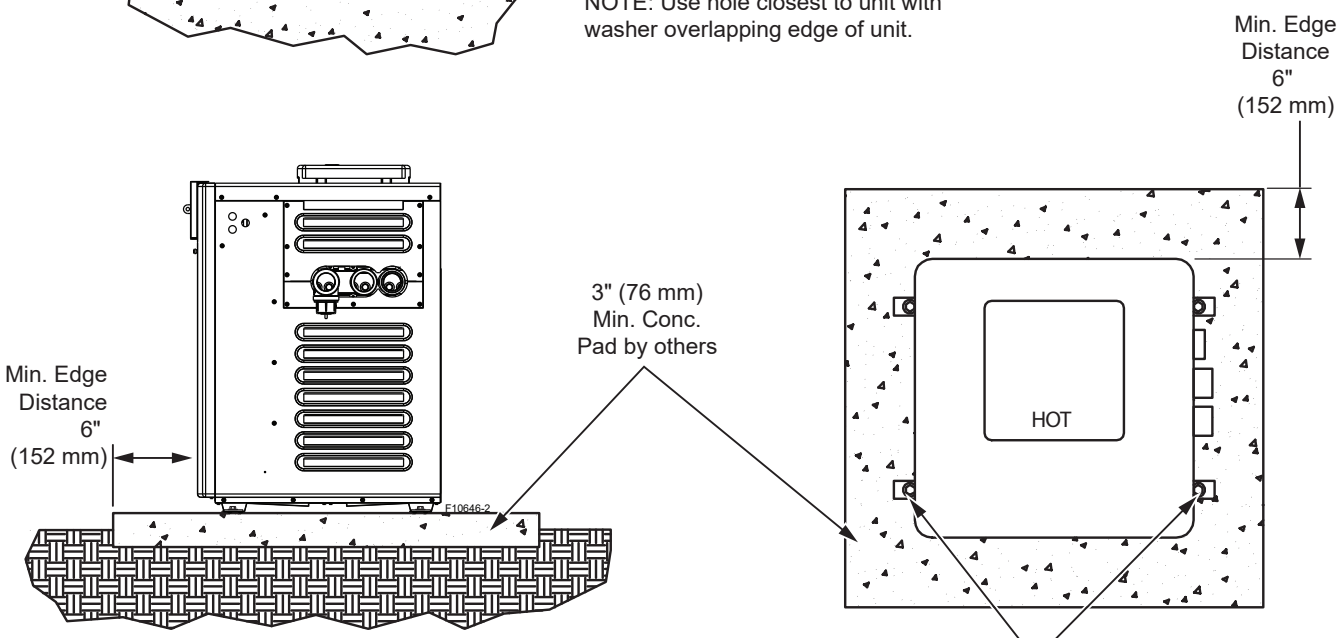

Outdoor and Indoor Stacks

The outdoor and indoor stacks are optional equipment and do not come standard with the heater. Refer to installation instructions inside box for instructions on how to install outdoor/indoor stack.

Model	Outdoor Stack	Indoor Stack
206A	009834	009838
266A	009835	009839
336A	009836	009840
406A	009837	009841

Table D. Outdoor and Indoor Stack Kit Number

OUTDOOR STACK KIT

(1) Outdoor drafthood, painted

(1) Adapter plate

(3) Mounting brackets (clips)

(1) Top panel cover

(2) 1-foot sections of metal tape

(3) Screws

(1) Instructions

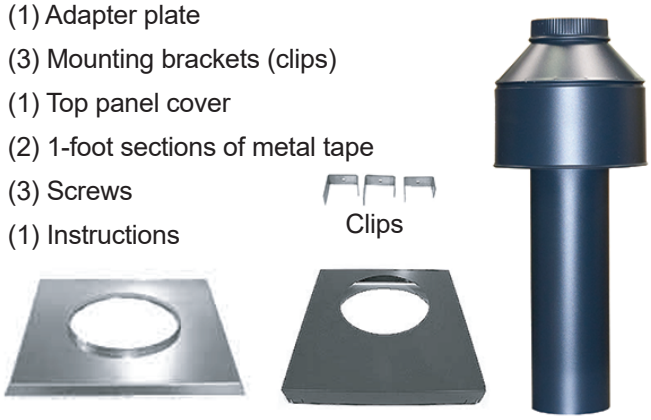

Figure 6. Outdoor Stack Kit Components

NOTE: The outdoor drafthood kit does not require any additional vent pipe for proper operation. This drafthood functions as the vent termination.

INDOOR STACK KIT

(1) Drafthood, unpainted

(1) Adapter plate

(3) Mounting brackets (clips)

(3) Screws

(1) Instructions

Figure 7. Indoor Stack Kit Components

Combustion and Ventilation Air

Indoor Units Only

The heater must have both combustion and ventilation air. The minimum requirements are listed in the latest edition of the National Fuel Gas Code (U.S. ANSI Z223.1 or Canada CAN/CSA-B149) and any local codes that may have jurisdiction. The most common approach is the "2-opening" method, with combustion air opening no more than 12" from the floor and the ventilation opening no more than 12" from the ceiling. For opening sizes using this method, see below.

All Air from Inside the Building:

Each opening shall have a minimum net free area as noted:

Model	Sq. in. (m^2)
206A	200 (0.13)
266A	266 (0.17)
336A	333 (0.21)
406A	399 (0.26)

Table E. Opening Minimum Net Free Requirements - Indoor Air

All Air from Outdoors:

When air is supplied directly from outside the building, each opening shall have a minimum net free area as noted:

Model	Unrestricted Opening sq. in. (m^2)	Typical Screened or Louvered Opening sq. in. (m^2)	Typical Screened and Louvered Opening sq. in. (m^2)
206A	50 (0.03)	75 (0.05)	100 (0.06)
266A	67 (0.04)	101 (0.06)	134 (0.09)
336A	84 (0.05)	126 (0.08)	168 (0.11)
406A	100 (0.06)	150 (0.1)	200 (0.13)

Table F. Opening Minimum Net Free Requirements - Outdoor Air

⚠CAUTION: Combustion air must not be contaminated by corrosive chemical fumes which can damage the heater. Such damage will not be covered by the warranty.

Specifications and Dimensions

Amp Draw	
120 VAC, 1Ph, 60Hz	240 VAC, 1Ph, 60Hz
4	2

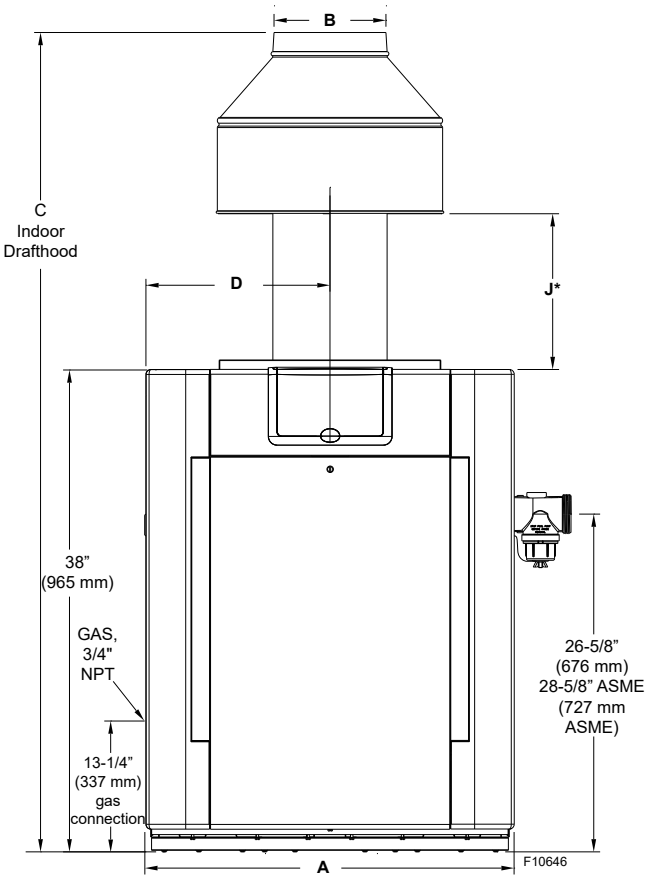

Figure 8. Front View

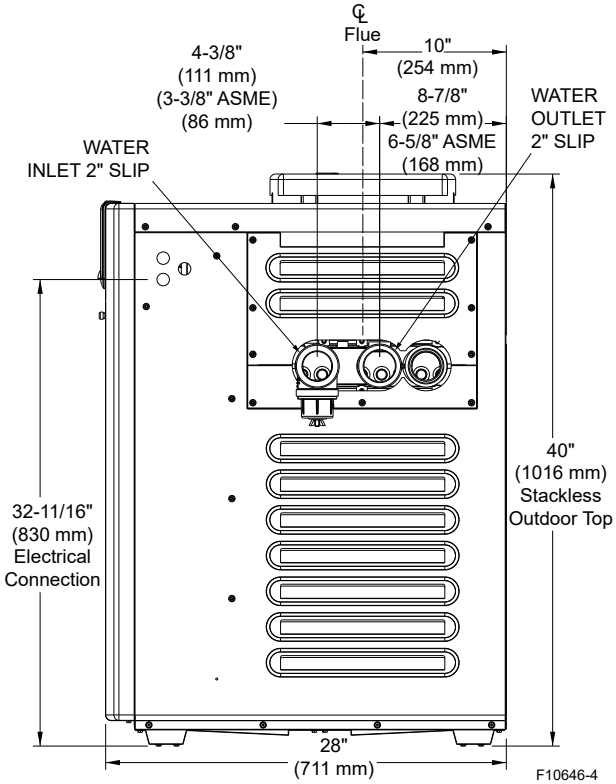

Figure 9. Side View

Residential - Copper Heat Exchanger							Shipping Weights lbs. (kg)	
Heater Mode	MBTUH Input (kwh)	(A) Cabinet Width in. (mm)	(B) Flue Dia. in. (mm)	(C) Indoor Drafthood in. (mm)	(D) in. (mm)	(J)* in. (mm)	Standard Heater w/Stackless Top	Indoor Draft-Hood
P-206A-EN-C	199.5 (58.4)	20 (508)	6 (152)	61-5/8 (1565)	10.0 (254)	11-3/4 (298)	187 (85)	14 (6.4)
P-266A-EN-C	266.0 (77.9)	23 (584)	7 (178)	62 (1575)	11.5 (292)	11 (279)	210 (95)	16 (7.3)
P-336A-EN-C	332.5 (97.4)	26 (660)	8 (203)	63 (1600)	13 (330)	10-5/8 (270)	230 (104)	19 (8.6)
P-406A-EN-C	399 (116.9)	29 (737)	9 (229)	64-9/16 (1640)	14.5 (368)	12-1/8 (309)	249 (113)	21 (9.5)

*Note: For outdoor stack height, use "J" dimension for appropriate size **plus** 6 inches (152 mm).

Table G. Residential - Copper Heater Specifications and Dimensions

Residential - Cupronickel Heat Exchanger							Shipping Weights lbs. (kg)	
Heater Mode	MBTUH Input (kwh)	(A) Cabinet Width in. (mm)	(B) Flue Dia. in. (mm)	(C) Indoor Drafthood in. (mm)	(D) in. (mm)	(J)* in. (mm)	Standard Heater w/Stackless Top	Indoor Draft-Hood
P-206A-EN-X	180.0 (52.7)	20 (508)	6 (152)	61-5/8 (1565)	10.0 (254)	11-3/4 (298)	187 (85)	14 (6.4)
P-266A-EN-X	240.0 (70.3)	23 (584)	7 (178)	62 (1575)	11.5 (292)	11 (279)	210 (95)	16 (7.3)
P-336A-EN-X	300.0 (87.9)	26 (660)	8 (203)	63 (1600)	13 (330)	10-5/8 (270)	230 (104)	19 (8.6)
P-406A-EN-X	360.0 (105.5)	29 (737)	9 (229)	64-9/16 (1640)	14.5 (368)	12-1/8 (309)	249 (113)	21 (9.5)

*Note: For outdoor stack height, use "J" dimension for appropriate size **plus** 6 inches (152 mm).

Table H. Residential - Cupronickel Heater Specification and Dimensions

Commercial - ASME Copper or Cupronickel Heat Exchanger							Shipping Weights lbs. (kg)	
Heater Mode	MBTUH Input (kwh)	(A) Cabinet Width in. (mm)	(B) Flue Dia. in. (mm)	(C) Indoor Drafthood in. (mm)	(D) in. (mm)	(J)* in. (mm)	ASME Heater w/Stackless Top	Indoor Draft-Hood
B-206A-EN-(C)	199.5 (58.4)	20 (508)	6 (152)	61-5/8 (1565)	10.0 (254)	11-3/4 (298)	206 (94)	14 (6.4)
B-266A-EN-(C or X)	266.0 (77.9)	23 (584)	7 (178)	62 (1575)	11.5 (292)	11 (279)	229 (104)	16 (7.3)
B-336A-EN-(C or X)	332.5 (97.4)	26 (660)	8 (203)	63 (1600)	13 (330)	10-5/8 (270)	249 (113)	19 (8.6)
B-406A-EN-(C or X)	399 (116.9)	29 (737)	9 (229)	64-9/16 (1640)	14.5 (368)	12-1/8 (309)	268 (122)	21 (9.5)

*Note: For outdoor stack height, use "J" dimension for appropriate size **plus** 6 inches (152 mm).

Table I. Commercial - Heater Specifications and Dimensions

Vent Piping

⚠WARNING: Indoor heaters require a drafthood that must be connected to a vent pipe and properly vented to the outside. Failure to follow this procedure can cause fire or fatal carbon monoxide poisoning.

When properly installed outdoors, only the outdoor stackless top (provided) is required. If installed indoors, a drafthood is required, connected to a CATEGORY I (a heater that operates with a non-positive vent static pressure and a vent gas temperature that avoids excessive condensate production in the vent.) vent per the National Fuel Gas Code and local requirements.

Vent piping the same size as the drafthood outlet is recommended, however, when the total vent height is at least 10 ft (3 m) (drafthood relief opening to vent terminal), the vent pipe size may be reduced by no more than one (1) size as specified in Chapter 13 of the National Fuel Gas Code, ANSI Z223.1 (Canada - CAN/CSA-B149).

As much as possible, avoid long horizontal runs of vent pipe and too many elbows. If installation requires horizontal runs, the vent pipe must have a minimum of 1/4 in. per ft rise (20.8 mm per meter rise) and should be supported at not more than 5 ft (1.5 m) intervals.

Plumber's tape, criss-crossed, will serve to space both horizontal and vertical piping. Gas vents supported only by the flashing and extending above the roof more than 5 ft (1.5 m) should be securely guyed or braced to withstand snow and wind loads. We recommend use of insulated vent pipe spacers through the roof and walls.

For protection against rain or blockage by snow, the vent pipe must terminate with a vent cap which complies with the local codes or, in the absence of such codes, to the latest edition of the National Fuel Gas Code, ANSI Z223.1 (Canada - CAN/CSA-B149).

The discharge opening must be a minimum of 2' (0.6 m) vertically from the roof surface and at least 2' (0.6 m) higher than any part of the building within 8' (2.4 m). Vent stack shall be at least 5 ft (1.5 m) in vertical height above the drafthood outlet. The vent cap location shall have a minimum clearance of 4 ft (1.2 m) horizontally from, and in no case below, unless a 4 ft (1.2 m) horizontal distance is maintained, from electric meters, gas meters, regulators and relief equipment.

The weight of the vent stack or chimney must not rest on the heater drafthood. Support must be provided in compliance with applicable codes. The heater top and drafthood must be readily removable for maintenance and inspection. Vent pipe should be adequately supported to maintain proper clearances from combustible construction.

Flue materials must be certified to CATEGORY I or better. Type “B” double-wall or equivalent vent pipe is recommended. A draft of -0.01" to -0.08" WC must be maintained. However, single-wall metal vent pipe may be used as specified in the latest edition of the National Flue Gas Code, ANSI Z223.1 (Canada - CAN/CSA-B149).

D-2 Power Vent Kit

Another option for an installation that requires horizontal runs is the D-2 power vent kit option.

Model	120 VAC P/N	240 VAC P/N
206A	010744	009832
266A	010744	009832
336A	010745	009833
406A	010745	009833

Table J. Power Vent Kit Part Numbers

NOTE: The D-2 Power Vent operates with a positive vent static pressure and with a vent gas temperature that prevents excessive condensate production in the vent, and as such, is a CATEGORY III appliance. For more information consult the D-2 Power Vent manual, (P/N: 241243). CATEGORY I vent material such as B-vent must not be used under CATEGORY III conditions.

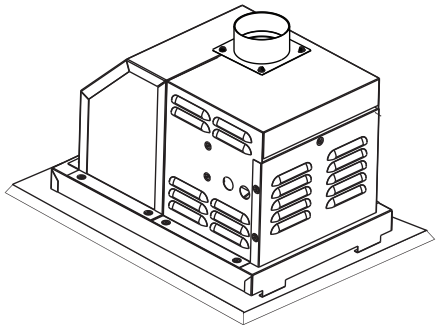

Figure 10. D-2 Power Vent Option

The power vent system is a fan-assisted vent system designed for use on models 266A-406A.

The power vent system, when installed as directed, is capable of operating in applications such as through-the-wall venting with reduced horizontal and vertical vent pipe sizes in new and current installations. The unit is factory-wired for 240 VAC, with capability of field-rewiring for 120 VAC.

For more information consult the D-2 Power Vent manual, (P/N: 241243). This Manual can be viewed on your smart device. See QR Code on page 45. This manual can also be found in the document library at www.raypak.com.

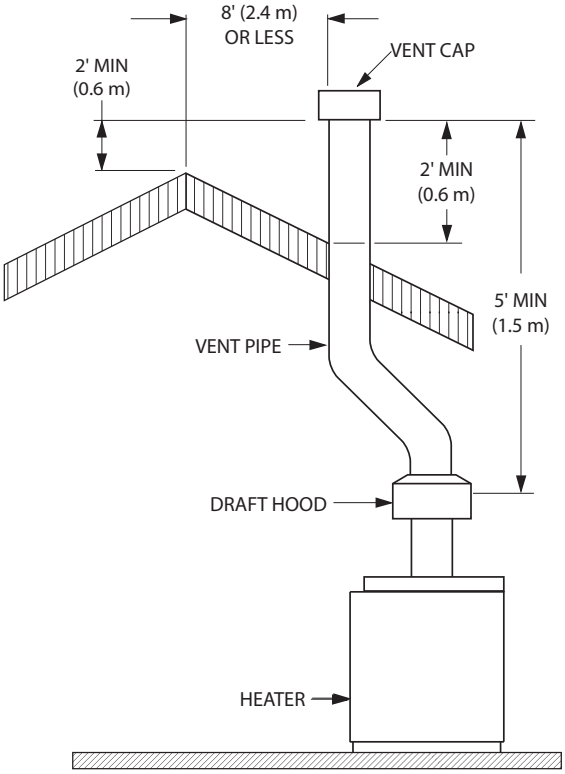

Figure 11. Venting Clearances

NOTE: For common venting of two or more heaters, contact the factory.

Gas Supply Connections

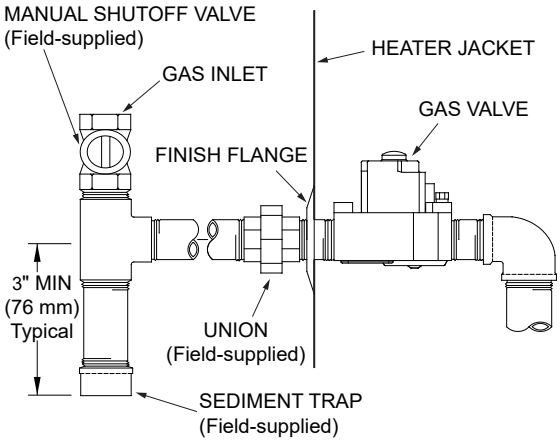

Figure 12. Gas Supply Plumbing

Gas piping must have a sediment trap ahead of the heater gas controls, and a manual shutoff valve located outside the heater jacket. All gas piping should be tested after installation in accordance with local codes.

⚠CAUTION: The heater and its manual shutoff valve must be disconnected from the gas supply during any pressure testing of that system at test pressures in excess of 1/2 psi (3.45 kPa). Dissipate test pressure in the gas supply line before reconnecting the heater and its manual shutoff valve to gas supply line. FAILURE TO FOLLOW THIS PROCEDURE MAY DAMAGE THE GAS VALVE. OVER-PRESSURIZED GAS VALVES ARE NOT COVERED BY WARRANTY. The heater and its gas connections shall be leak tested before placing the appliance in operation. Use soapy water for leak test. DO NOT use open flame.

Supply Pressure

⚠CAUTION: Do not use Teflon tape on gas line pipe thread. Only sealant tape or a pipe compound rated for use with natural and propane gases is recommended. Apply sparingly only on male pipe ends, leaving the two end threads bare.

A minimum of 6 in. WC and a maximum of 10.5 in. WC upstream pressure under load and no-load conditions must be provided for natural gas. A minimum of 12 in. WC and a maximum of 13 in. WC are required for propane gas under load and no-load conditions.

Gas Regulator Best Practices

From the gas pressure regulator it is recommended to have no less than 10 pipe diameters of straight smooth pipe downstream of the regulator discharge and to have no less than 10 linear feet (not including fittings) between the regulator and the inlet to the appliance for proper operation.

Gas Pressure Regulator

The gas pressure regulator is preset at 4.0 in. WC for natural gas, and 10.5 in. WC. for propane gas. The pressure at the gas valve, taken with a manometer, should be about 4.0 in. WC natural gas and 10.5 in. WC propane gas. If an adjustment is needed, remove seal and turn adjustment screw clockwise ↻ to increase pressure or counter-clockwise ↺ to decrease pressure.

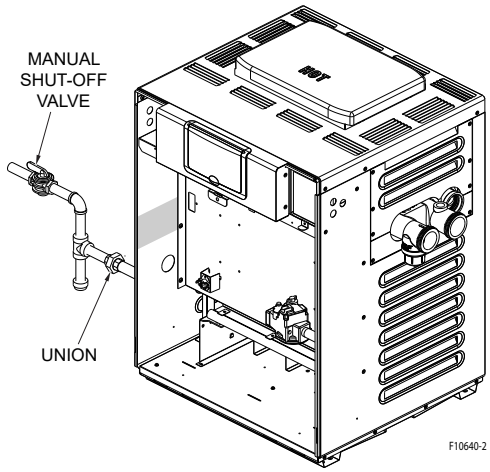

Figure 13. Manual Shutoff Valve Installation

Gas Pressure Adjustment Locations

Electronic Ignition Gas Valves

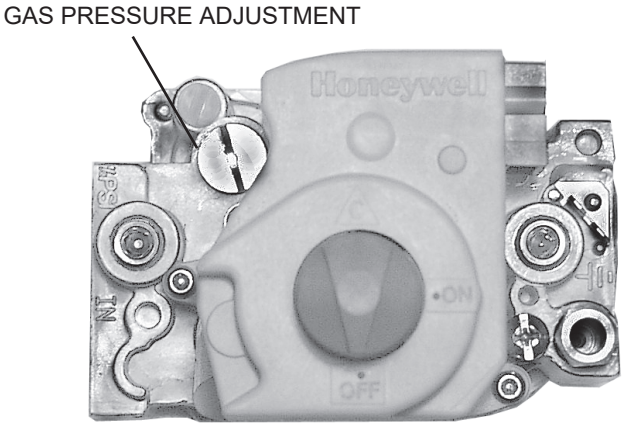

Figure 14. Honeywell VR8340 (Heater Models 266A - 406A)

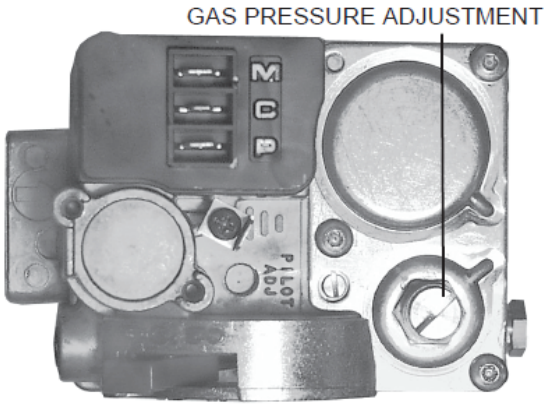

Figure 15. Robertshaw 7200 (Heater Model 206A)

Pipe Sizing for Gas Connection

These capacities shown below based on using SCH 40 black iron pipe. For capacities using other materials, consult local code.

Maximum Equivalent Pipe Length (ft) (m)								
Natural Gas 1000 BTU/FT^3 0.60 Specific Gravity @ 0.5 in WC Pressure Drop								
Propane Gas 2500 BTU/FT^3 1.53 Specific Gravity @ 0.5 in WC Pressure Drop								
Model	3/4"		1"		1-1/4"		1-1/2"	
	NAT	PRO	NAT	PRO	NAT	PRO	NAT	PRO
206A	25 (7.6)	60 (18.3)	90 (27.4)	215 (65.5)	360 (109.7)			
266A	15 (4.6)	35 (10.7)	50 (15.2)	125 (38.1)	210 (64.0)	480 (146.3)	445 (135.6)	
336A	10 (3.0)	20 (6.1)	30 (9.1)	80 (24.4)	140 (42.7)	320 (97.5)	290 (88.4)	
406A	*	15 (4.6)	20 (6.1)	55 (16.8)	95 (29.0)	225 (68.6)	215 (65.5)	480 (146.3)

* A 3/4" gas line can be used for up to 5' (1.5 m) maximum length from the gas valve in addition to the sediment trap.

Table K. Gas Pipe Sizing

Flow Rates

Model	Pipe Size	Min. GPM (lpm)	Max. GPM (lpm)
206A	1-1/4"–1-1/2"–2"	20 (75)	100 (378)
266A	1-1/4"–1-1/2"–2"	25 (95)	100 (378)
336A	1-1/4"–1-1/2"–2"	35 (132)	100 (378)
406A	1-1/4"–1-1/2"–2"	40 (151)	100 (378)

* When flow rates exceed maximum GPM an external auxiliary bypass valve is required. See external bypass valve section for details.

Table L. Minimum and Maximum Flow Rates

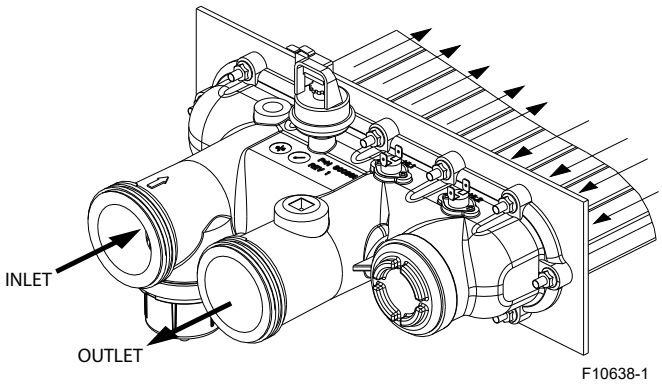

Figure 16. Polymer Header Water Flow

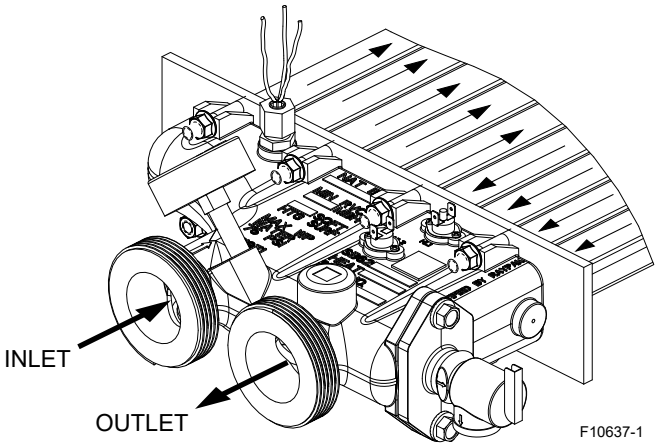

Figure 17. Bronze Header (ASME) Water Flow

Flow GPM (lpm)	Pressure Drop (Ft. of Head) (m of Head)			
	206A	266A	336A	406A
20 (75)	4.0 (1.2)			
25 (95)	4.0 (1.2)	4.6 (1.4)		
30 (113)	4.0 (1.2)	5.2 (1.6)		
35(132)	4.0 (1.2)	5.8 (1.8)	5.2 (1.6)	
40 (151)	4.6 (1.4)	5.8 (1.8)	5.2 (1.6)	5.2 (1.6)
50 (189)	4.6 (1.4)	6.3 (1.9)	6.9 (2.1)	6.9 (2.1)
60 (227)	4.6 (1.4)	6.9 (2.1)	6.9 (2.1)	6.9 (2.1)
70 (265)	4.6 (1.4)	8.1 (2.5)	9.2 (2.8)	9.2 (2.8)
80 (303)	4.6 (1.4)	9.2 (2.8)	9.8 (3.0)	9.8 (3.0)
90 (340)	6.9 (2.1)	10.4 (3.2)	10.4 (3.2)	10.4 (3.2)
100 (378)	8.1 (2.5)	11.0 (3.4)	12.1 (3.7)	12.1 (3.7)

Table M. Polymer Heat Exchanger Pressure Drop - Residential Models - (UG Fully Open)

Flow GPM (lpm)	Pressure Drop - Ft. of Head (m of Head)			
	206A	266A	336A	406A
20 (75)	6.7 (2.0)			
30 (113)	9.9 (3.0)	10.7 (3.2)		
40 (151)	10.6 (3.2)	11.3 (3.4)	10.0 (3.0)	10.1 (3.1)
50 (189)	11.0 (3.4)	11.3 (3.4)	10.6 (3.2)	10.1 (3.1)
60 (227)	11.0 (3.4)	11.8 (3.6)	10.7 (3.2)	10.7 (3.2)
70 (265)	11.0 (3.4)	12.1 (3.7)	10.7 (3.2)	10.9 (3.3)
80 (303)	11.4 (3.5)	12.2 (3.7)	11.3 (3.4)	11.3 (3.5)
90 (340)	11.9 (3.6)	12.3 (3.8)	11.9 (3.6)	11.8 (3.6)
100 (378)	12.5 (3.8)	12.5 (3.8)	12.4 (3.8)	12.4 (3.8)

Table N. Bronze Heat Exchanger Pressure Drop - ASME Models (UG Closed) ***Updated as of May 2026***

NOTE: Table capacity is based on schedule 40 black iron pipe. For capacity using other material, consult local codes.

Polymer Headers (Residential Models)

Before attaching the 2-inch unions to the inlet/outlet header, make sure the O-rings are properly seated in the grooves. Use Aqualube or equivalent non-petroleum-based lubricant on the O-ring. **Hand-tighten the unions**. Glue PVC piping directly to the unions.

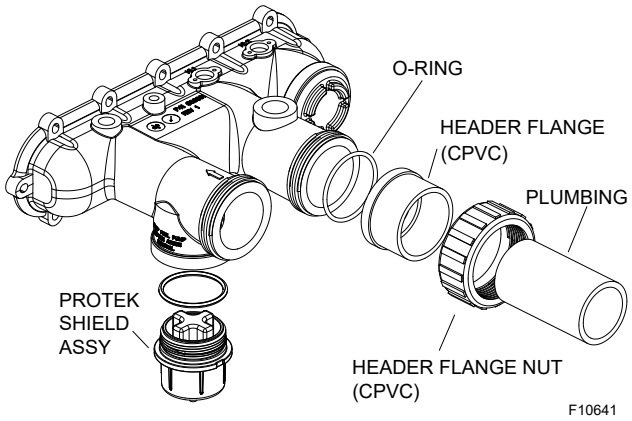

Figure 18. Inlet/Outlet Header – Polymer

High-temperature CPVC header flanges and header flange nuts are provided. If there is any possibility of back-siphoning when the pump stops, it is suggested that a check valve (or valves) also be installed in the system.

Bronze Headers (ASME Models)

Heater must be located so that any water leaks will not damage the structure of adjacent area. Before attaching the ProTek Shield Adapter to the inlet connection and the 2-inch unions, make sure the O-rings are properly seated in the grooves. Use Aqualube or equivalent non-petroleum-based lubricant on the O-ring. **Hand-tighten the unions**. Glue PVC piping directly to the unions.

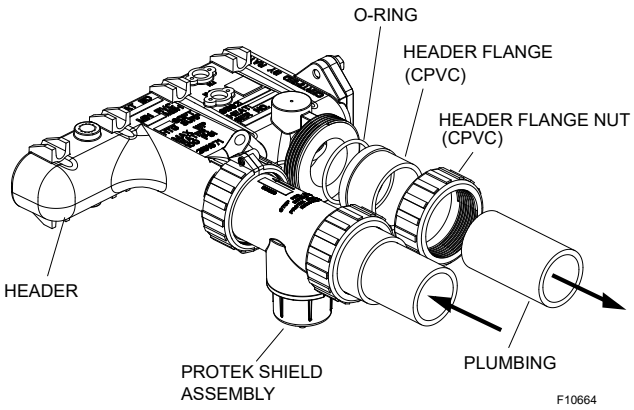

Figure 19. Inlet/Outlet Header – Bronze

NOTE: Some jurisdictions require the addition of a flow switch on ASME installations. Kit# 015889F for flange connection or 015890F for NPT connection can be ordered that will allow a standard ASME unit to comply with the code requirements.

ProTek Shield Assembly

This heater is equipped with a ProTek Shield Assembly (located under the inlet connection on polymer headers) and in the ProTek Shield Adapter assembly shipped loose in the accessory carton for field-installation on bronze ASME headers.

This component provides protection to the heat exchanger against galvanic corrosion, when properly bonded to the heat exchanger. It should be replaced when the weight of the ProTek Shield is reduced to about 40% of the original weight (1.46 lbs.)

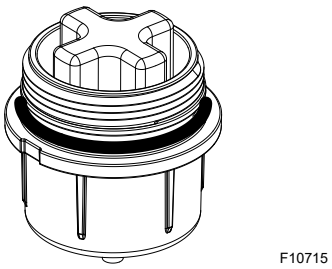

Figure 20. ProTek Shield Assembly

⚠ CAUTION: STOP the pool pump before attempting to remove ProTek Shield Assy. Failure to do so may result in damage to ProTek Shield Assy, loss of pool water, or personal injury.

CAUTION: Do not use tools to remove (twist) the ProTek Shield Assy or the wing nut on the stud of the ProTek Shield Assy. Non-warrantable damage may occur.

Follow the steps below to replace the ProTek Shield Assy:

1. Shut off the pool pump and bleed pressure from the system.
2. Close isolation valves to minimize pool/spa water loss.
3. Remove wing nut from bottom stud on ProTek Shield Assy.
4. Remove bonding wire ring terminal from stud.
5. Rotate ProTek Shield Assy. counter-clockwise (by hand) to unscrew it from the assembly.
6. Inspect/replace as necessary and reverse above procedure to reinstall. Hand tighten only! Do not use tools.

NOTE: Make sure the O-ring is properly seated in the O-ring groove before installation.

Unitherm Governor Operation

⚠CAUTION: The patented Unitherm Governor is a thermostatic mixing valve specifically designed to maintain constant heater internal temperature between 105°F (41°C) and 115°F (46°C) despite continually changing flow rates from the filter and changing pool temperatures. This narrow range is needed to prevent damaging condensation on the burners which will occur if the heater runs for any length of time below 100°F (38°C). It is also needed to inhibit scale formation in the tubes by maintaining temperatures well below accelerated scaling temperatures.

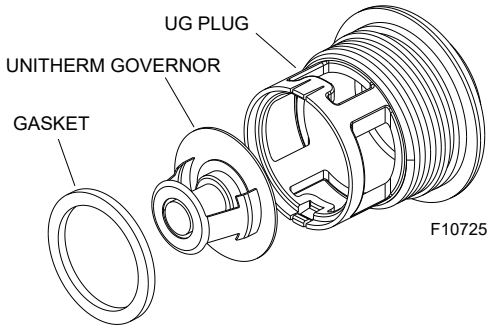

Figure 21. Unitherm Governor - Polymer

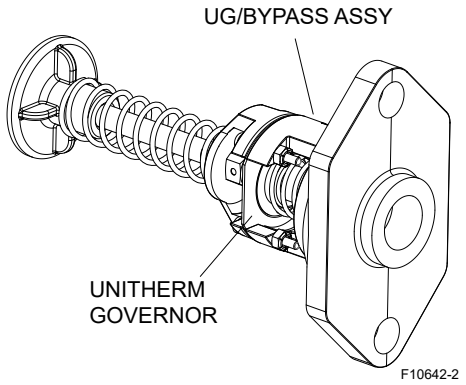

Figure 22. Unitherm Governor - Bronze

Internal Automatic Bypass Valve

In addition to the Unitherm Governor, a built-in automatic bypass valve is provided in the In/Out header. While the Unitherm Governor responds to the changes in water temperature in the heater, the internal bypass valve automatically responds to changes in water pressure in the piping system. Proper amount of water flow is maintained through the heater under varying pressures dictated by the conditions of the pump and filter.

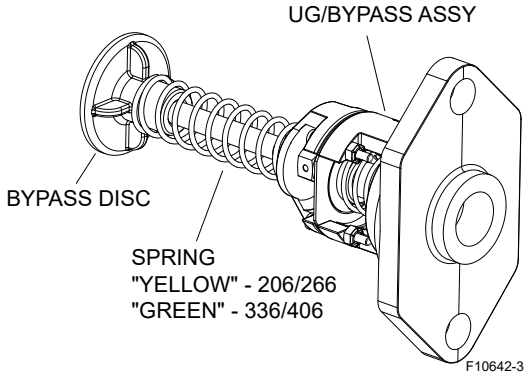

Figure 23. Internal Automatic Bypass Valve - Bronze

NOTE: The Unitherm Governor and Bypass Valve Assy are not individually-replaced components on ASME units. If either needs to be replaced, the entire UG/ Bypass assy must be replaced. The "yellow" spring is used on models 206A, 266A. The "green" spring is used on models 336A, 406A.

External Auxiliary Bypass Valve

Where Required - An auxiliary bypass valve should be used when flow rates exceed 100 GPM (378 lpm). Usually a high-performance pump size larger than two horsepower will exceed this flow rate. This valve is required to complement the function of the automatic bypass valve, particularly when starting the heater in winter or early spring when the spa or pool temperature is below 50°F (10°C). It also serves to eliminate needless pressure drop through the heater and accompanying reduction in the flow rate to the spa jets, etc.

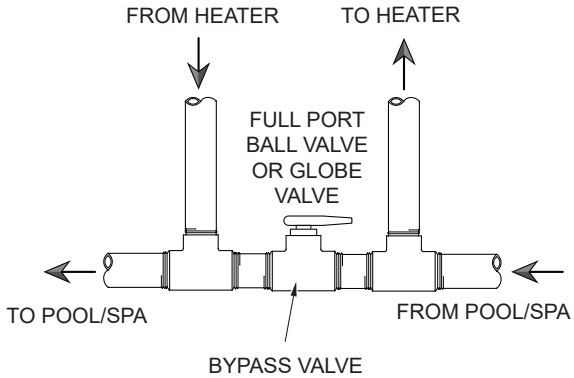

*Do not use a gate valve.

Figure 24. Auxiliary Bypass Valve

Auxiliary Bypass Valve Adjustment

To set bypass, with clean filter, adjustment is made by feeling the inlet and outlet pipes at the heater. Outlet pipes should be slightly warmer than inlet and comfortable to the touch. If pipe is hot, close bypass; if cold, open bypass.

Pressure Relief Valve Installation

To conform to local building codes, it may be necessary to install a pressure relief valve. A 3/4" pressure relief valve, having a capacity equal to or greater than to the BTU output of the model to be installed, is recommended for this heater.

A 3/4" NPT connection is provided in the Polymer header for installation of a pressure relief valve. The valve shall be installed in a vertical position. Do not over-tighten. Install pressure relief valve hand-tight plus 1/2 turn.

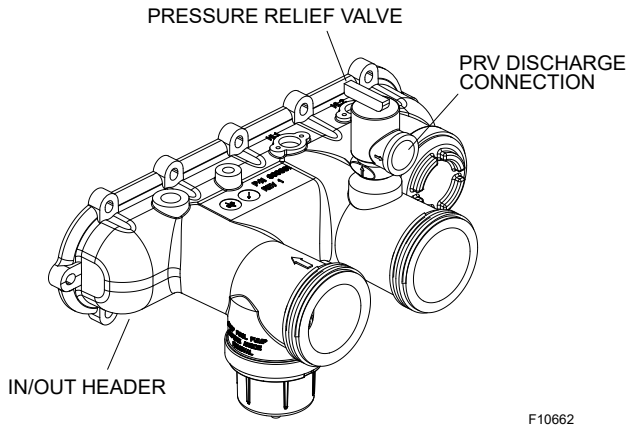

Figure 25. Field-Supplied Pressure Relief Valve, Residential Units

A 3/4" NPT connection is provided in the header for installation of a 75 PSI (517 kPa) pressure relief valve. The PRV is shipped loose in the accessory carton with the pagoda top. The pressure relief valve shall be installed in a vertical position.

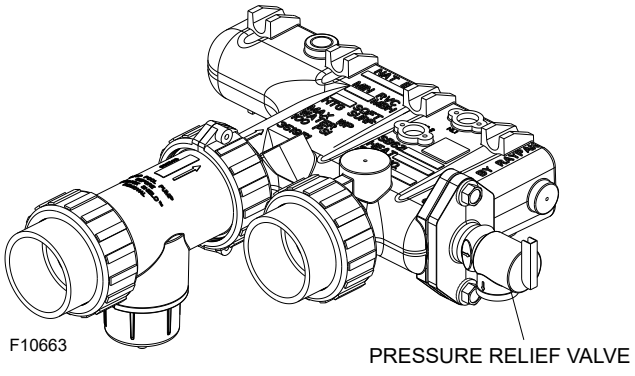

Figure 26. Pressure Relief Valve, Commercial Units

NOTE: To avoid water damage or scalding due to valve operation, drain pipe must be connected to valve outlet and run to a safe place of discharge. Drain pipe must be the same size as the valve discharge connection throughout its entire length and must pitch downward from the valve. No shutoff valve shall be installed between the relief valve and the drain line. Valve lever should be tripped at least once a year to ensure that waterways are clear.

The heater requires water flow and positive pressure to fire and operate properly. It must therefore be installed downstream of the discharge side of the filter pump. See **Figure 28** and **Figure 29**. A typical installation is plumbed as follows:

1. The inlet side of the filter is plumbed directly to the discharge side of the filter pump;
2. The outlet side of the filter is then plumbed to the inlet of the heater; and
3. The outlet of the heater is plumbed to the return line to the pool or spa. The pump, filter and heater are thus plumbed in series (Salt generators and chemical feeders must be downstream of the pool heater).

Plumbing from the heater back to the pool or spa must not have any valves or restriction that could prevent flow when the pump is operating.

⚠CAUTION: An additional source of heated water, e.g. a solar system, must be connected to the main line ahead of the heater inlet pipe in order for it to act as the primary heat source. If the primary system provides adequate heat to maintain setpoint, the heater will not fire. Be advised that the control panel will then display sensed water temperatures downstream of the primary heating system, rather than the temperature of the water exiting the pool.

Heater must be located so that any water leaks will not damage the structure of adjacent area. PVC pipe may be glued directly into the headers unions.

Heat Exchanger Reversal

Procedure for Residential Models

1. Remove right and left-side access panels. See **Figure 27.**

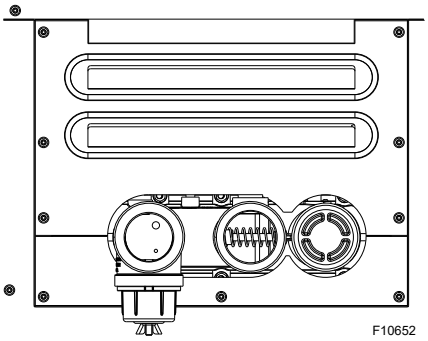

Figure 27. Access Panels

Plumbing Diagrams

Water Connection

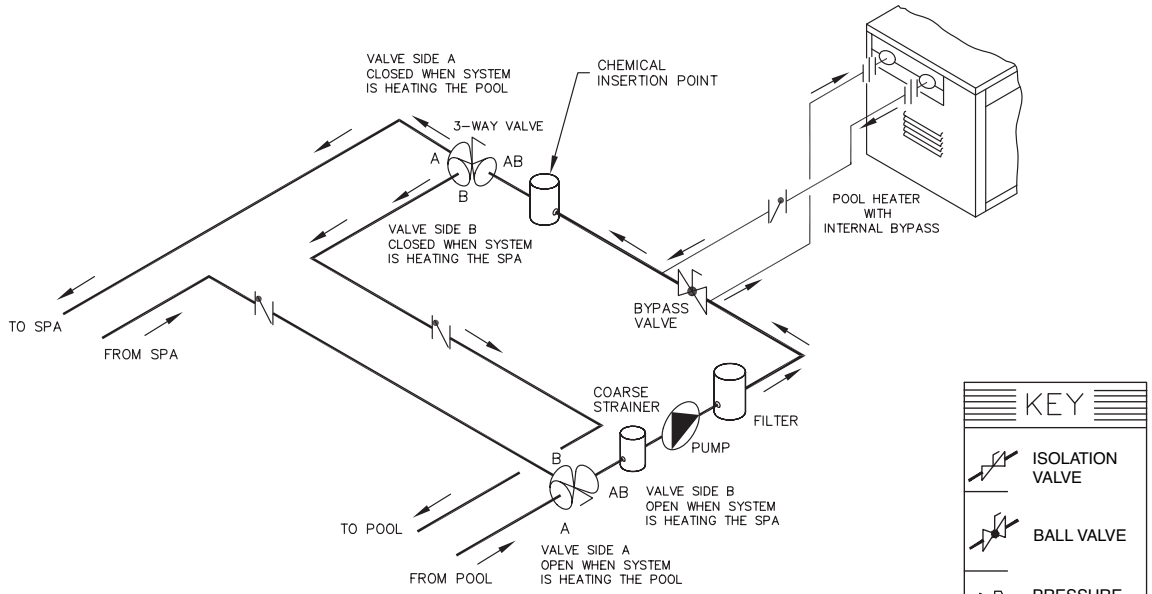

THIS DIAGRAM IS A RECOMMENDATION AND IS NOT INTENDED
TO REPLACE AN ENGINEERED PIPING SYSTEM BY A PROFESSIONAL ENGINEER

Figure 28. Single Heater Installation

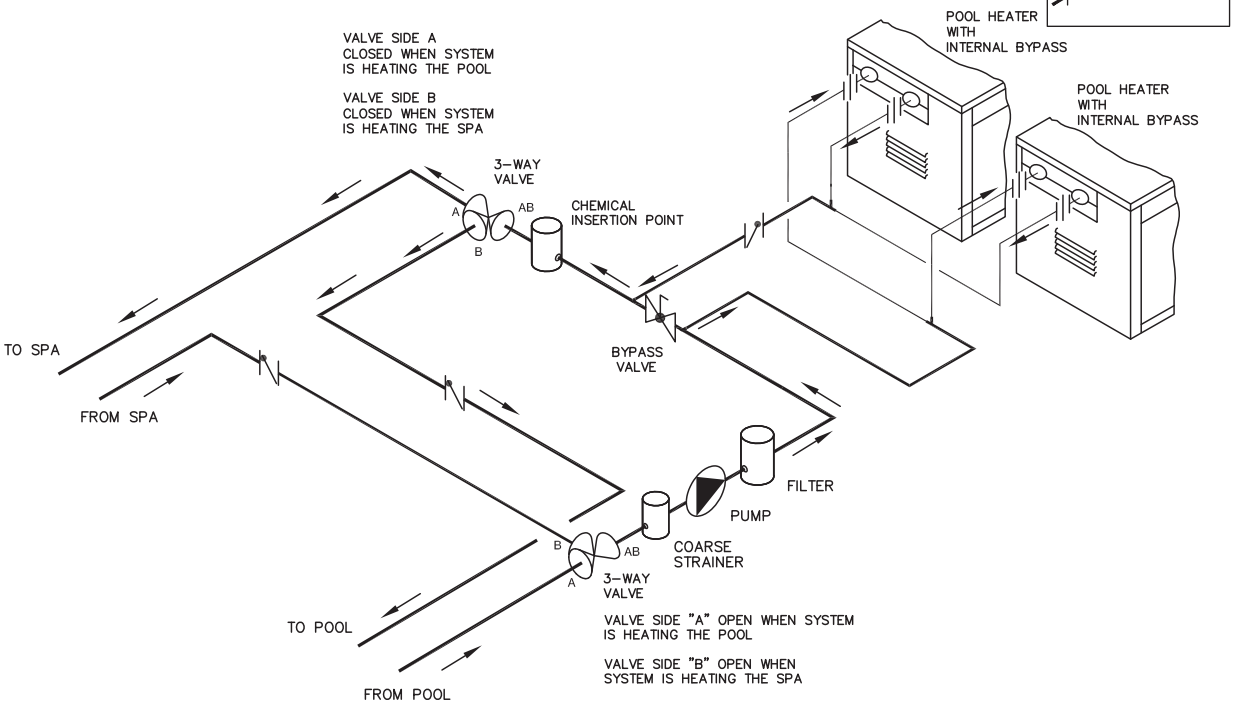

THIS DIAGRAM IS A RECOMMENDATION AND IS NOT INTENDED
TO REPLACE AN ENGINEERED PIPING SYSTEM BY A PROFESSIONAL ENGINEER

Figure 29. Multiple Heater Installation

2. Disconnect wires at high limit, AGS (automatic gas shutoff), water pressure switch on the in/out header and ProTek Shield bonding wire. See **Figure 30.**

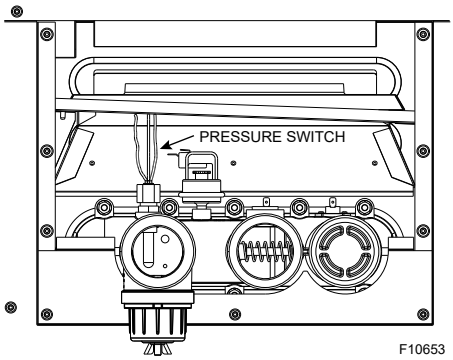

Figure 30. Component Wiring Locations - In/out Header

3. Remove the thermostat temperature sensor by loosening the compression fitting nut. Re-route the sensor to left-side of the heater. See **Figure 31**.

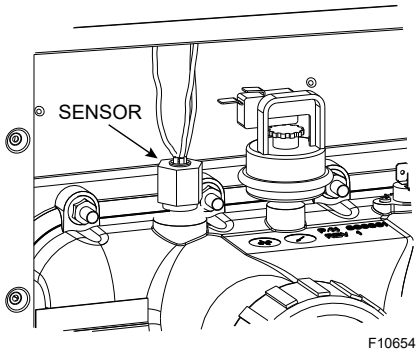

Figure 31. Digital Temperature Sensor Location

4. Remove (12) nuts holding the inlet/outlet and return headers to the tube sheets. Clean off tube sheet area where the gasket seats. Also clean off the header and the gasket. Apply a non-petroleum-based lubricant to the gasket such as Aqualube. Re-attach the headers to the opposite sides, making sure they are installed in an upright position. Do not over-tighten. Torque should not exceed 7 ft/lb. See **Figure 31.**
5. Reconnect high limit, AGS, water pressure switch wires, and ProTek Shield bonding wire.
6. Insert the temperature sensor into the compression fitting, so that the sensor is flush with the top of the fitting. Tighten 1/2 turn past hand-tight.
7. Allow for water flow through the heater and check for leaks.
8. Re-attach access panels to the opposite sides.

For instructions on reversing the heat exchanger connections on ASME models, call your factory representative.

5. ELECTRICAL WIRING

NOTE: If it is necessary to replace any of the original wiring, use 105°C wire or its equivalent, and/or 150°C wire or its equivalent, like the original wiring.

⚠WARNING: Digital heaters are factory-wired for 240 VAC, 1 Ph, 60 Hz power supply. DO NOT attempt to operate at 208 VAC.

The standard field-wiring connection is on the right-side of the heater.

To wire the heater from the left-side, follow these steps:

1. Remove the two (2) screws that hold the front door to the heater. Remove and set aside door for better access to wiring.
2. Remove the four (4) screws that hold down the junction box to the sway brace.
3. Remove the transformer cover located on the far right by removing one (1) screw.
4. Remove the two (2) screws that hold down the transformer.
5. Remove the one (1) screw that holds down the ground wires.
6. Disconnect P6 connector from PC board.
7. Remove transformer from its current location and relocate it on the far left-side of the heater.
8. Re-route all high-voltage wires and ground wires through the left jacket side of heater.
9. Re-install P6 connector, ground wires (SPG), transformer, junction box, front door, and plug right-side with the left-side's grommet plug.

NOTE: 7/8" diameter holes not utilized on jacket and control box can be used for fireman switch, auxiliary control interface or power vent (D-2) wiring.

Electrical Power Draw

⚠CAUTION: Heater must be electrically grounded and bonded. Bonding lug is provided loose with the heater. Install bonding lug on lower right or left-side of jacket as necessary for bonding the heater. Mounting hole is provided on the jacket.

NOTE: Failure to ground the heater electrically could affect the heater's electronics.

NOTE: See "Time Clock/Fireman's Switch" on page 30 for further instructions if using a time clock/ fireman's switch.

The Electronic Intermittent Ignition Device automatically lights the pilot and main burners upon a call-for-heat. The heater is supplied with a dual-voltage transformer for 120 VAC or 240 VAC input power hookup.

When operating on 120 VAC power, units draw 4 amps. When operating on 240 VAC power, units draw 2 amps.

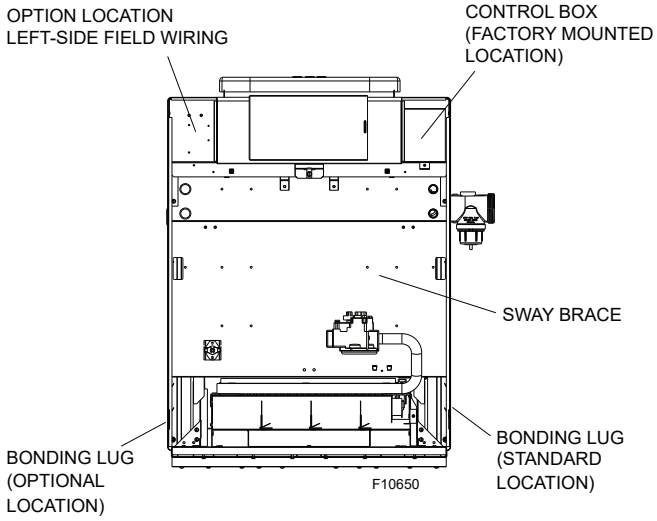

Figure 32. Heater Wiring Locations

Transformer Wiring

120 VAC Wiring

For 120 VAC input power to the unit, connect the black wire to the L1 or hot leg of the power supply. Connect the white wire to the "Ret" or neutral leg of the power supply. **There should be no connection to the red wire for 120 VAC operation.** Attach a wire nut to the red wire.

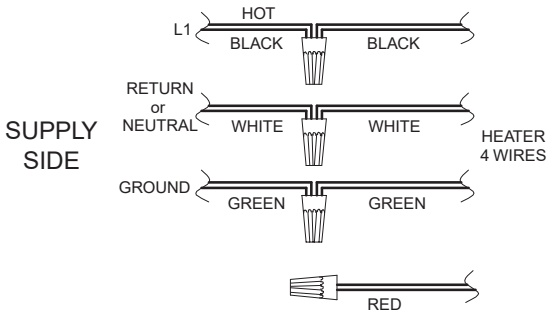

Figure 33. 120 VAC Wire Connection

240 VAC Wiring

For 240 VAC input power to the unit, connect the black wire to the "L1" or hot leg of the power supply. Connect the red wire to the L2 or second hot leg of the power supply. **There should be no connection to the white wire for 240 VAC operation.** Attach a wire nut to the white wire.

⚠WARNING: DO NOT attempt to operate the heater at 208 VAC.

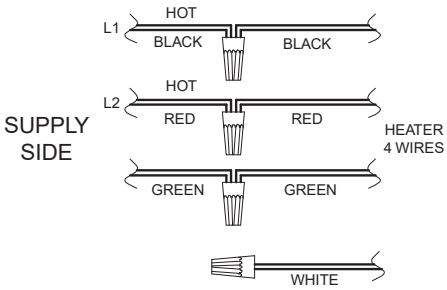

Figure 34. 240 VAC Wire Connection

Heater must be electrically grounded and bonded in accordance with local codes, or, in the absence of local codes, with the latest edition of the National Electrical Code, ANSI/NFPA 70. (Canada - Canadian Electrical Code, CSA C22.1, Part 1 and Part 2.)

⚠CAUTION: If the transformer's primary side is wired for 120 VAC and 240 VAC is applied, damage to the transformer and PC board may result. Such damages are not covered under manufacturer's limited warranty.

NOTE: Input power to the heater (120 or 240 VAC) can be supplied from the load (pump) side of time clock or directly from the GFCI power source. **It is preferred that full-time power be supplied to the heater from the GFCI power source, and that the heater be controlled by the fireman's switch connection or using a two or three-wire remote.** If using a switched GFCI power source, the heater could display false service indicators on the display panel if the pump is turned off.

6. WIRING DIAGRAM - DIGITAL

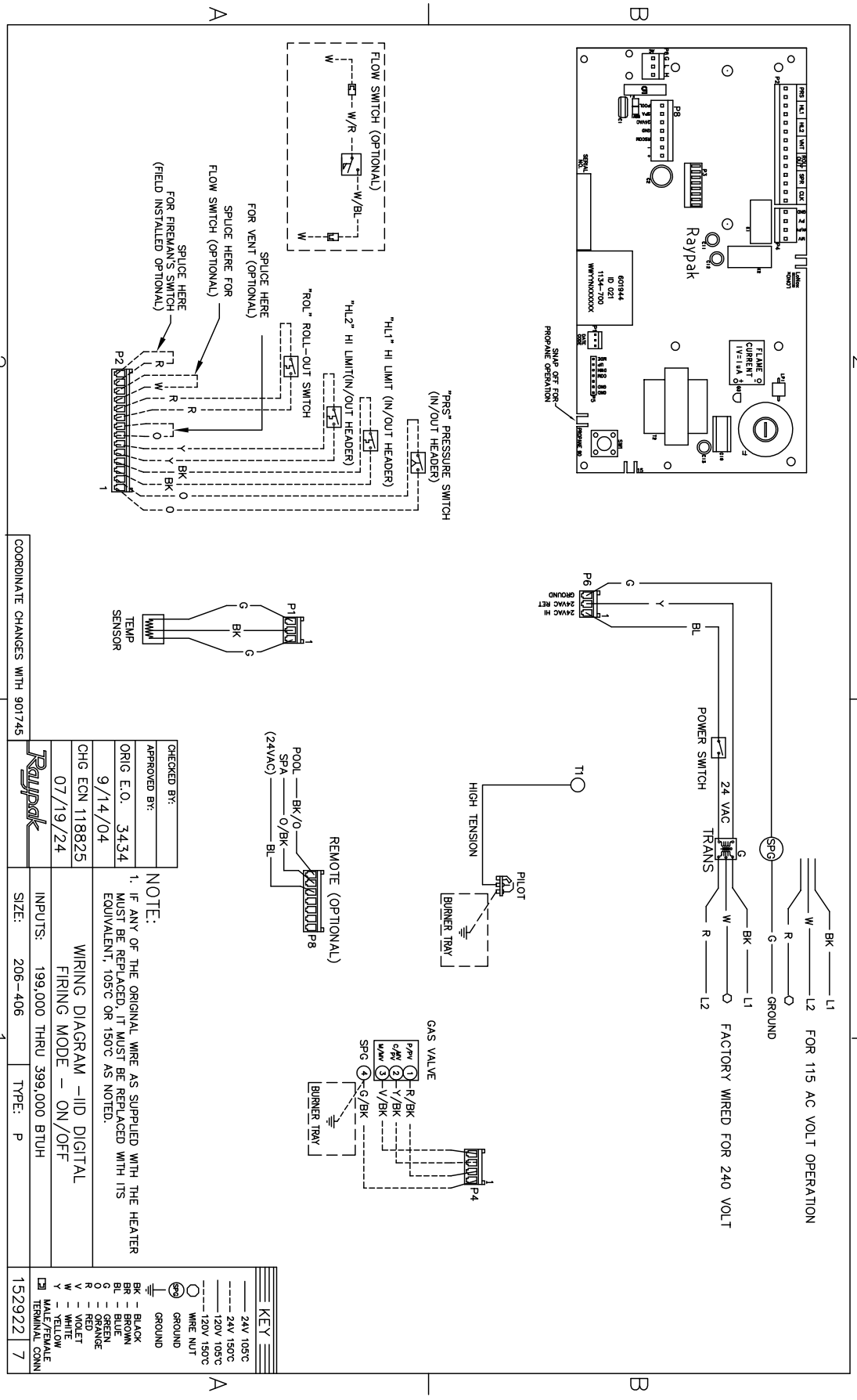

7. CONTROLS

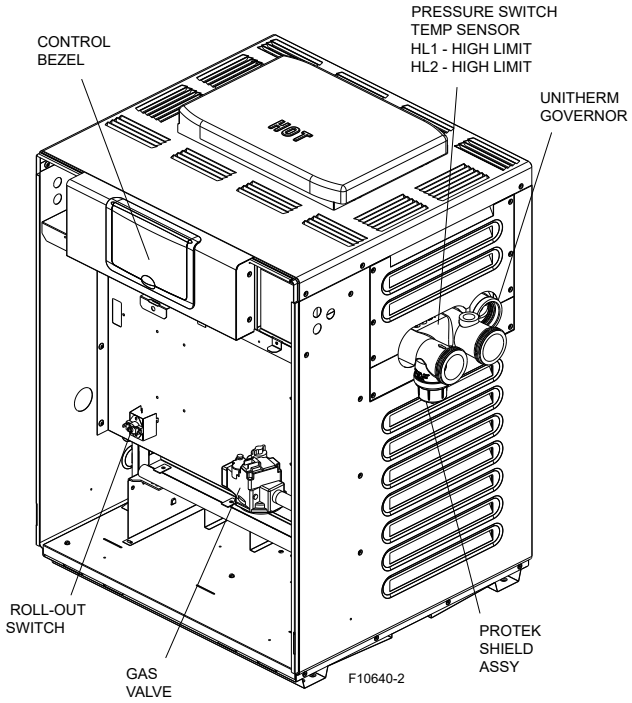

Figure 35. Location of Controls (View One)

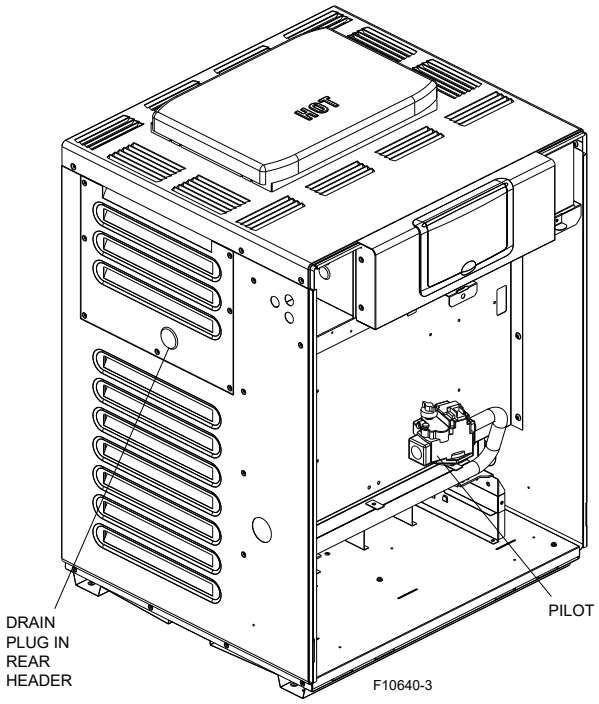

Figure 36. Location of Controls (View Two)

Control Panel Removal

1. Remove screw from front door. Set aside door for serviceability.
2. Remove (4) screws from sides of control panel.
3. Rotate control panel down until panel stops. Do not force.

NOTE: Caution must be used to not damage controls or wiring.

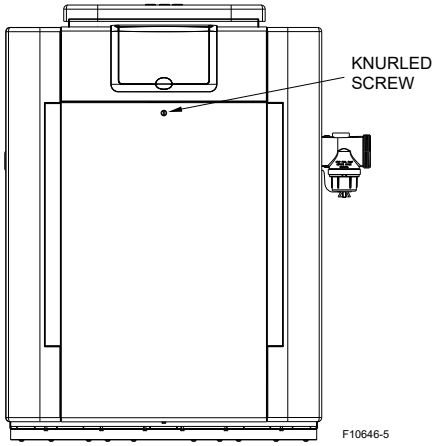

Figure 37. Knurled Screw Location

Control Adjustments

The pool heater touch-pad located on the upper front panel of the heater, allows the user to select either POOL or SPA operation, and to adjust the setpoint temperature. The LCD display window indicates the mode (OFF, SPA, POOL) and the actual water temperature. A manual power switch provided below the touch-pad turns the control power ON or OFF. See **Figure 40.**

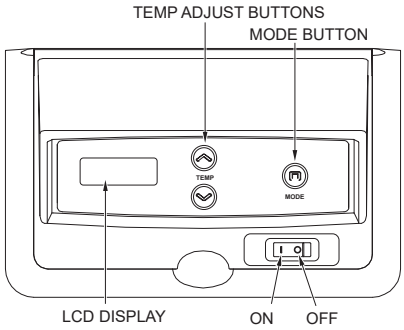

Figure 38. Control Adjustment

Mode Button

The MODE button is used to select POOL or SPA operation. It also allows the user to turn the heater off electronically, allowing the LCD to remain energized and to continue showing the actual water temperature.

Temp Buttons

If the heater is in POOL or SPA mode, the desired water temperature (SETPOINT) will be displayed and may be adjusted using the UP or DOWN buttons.

Operation

In the POOL or SPA modes, the actual water temperature is displayed along with the desired water temperature (SETPOINT). When the water temperature is above the setpoint, “Water Temp” will alternate with “No Demand.” When the water temperature is below the setpoint and the heater is firing, “Water Temp” will alternate with “Heating.”

To adjust the setpoint temperature, make sure the control is in the appropriate mode (POOL or SPA) and push the UP or DOWN buttons.

By default, the setpoint range is 50-104°F (10-40°C). See MAX Settings on page **27** to increase the MAX setting, if necessary.

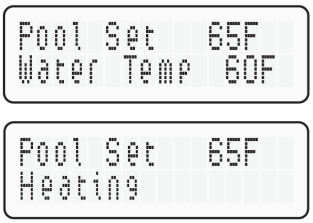

Figure 39. Alternating Display During Heating

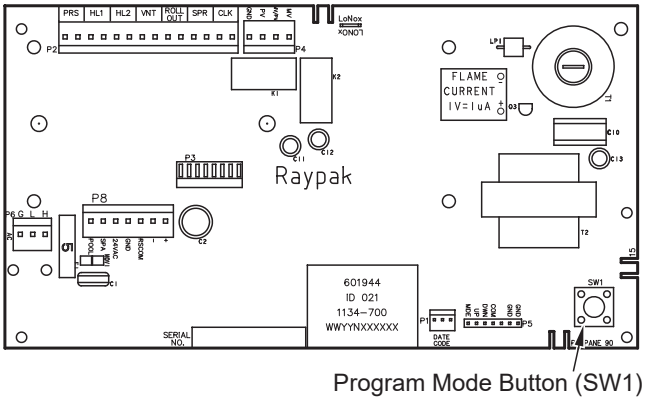

Figure 40. Thermostat Program Button (SW1)

Service Menu and Fault History

To access the Service Menu and fault history, press the Mode and UP buttons simultaneously for 3 to 5 seconds. The heater will continue to operate while in the Service Menu. The first screen displayed is the Flame Strength indicator, which indicates the pilot flame current using a bar graph and numerical display. A signal of less than 4 bars indicates a weak flame signal and may require service. Refer to the Troubleshooting section for possible causes and corrections.

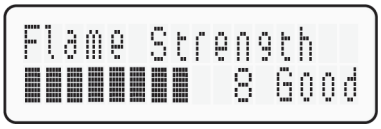

Figure 41. Flame Strength Indicator

Press the DOWN button. The Supply Voltage screen indicates the voltage supplied to the control board. Normal readings range from 24 to 29 volts.

Figure 42. Supply Voltage Indicator

Press the DOWN button. The Run Time indicates the total hours of operation for the pool heater, as measured by the amount of time that the main gas valve has been powered. The Cycle count indicates the number of on/off cycles of the heater, as measured by the number of times the pilot valve has been powered.

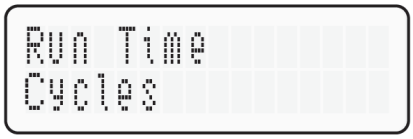

Figure 43. Run Time/Cycles

Press the DOWN button. The Fault History displays up to ten faults in memory. The order of the faults begins with “Fault Last,” which is the most recent fault, and proceeds through ten most recent messages in chronological order. The second line of the display shows the fault message. If there are no faults in the history buffer, the second line reads “All Faults Clear.”

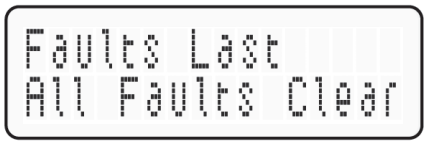

Figure 44. Fault History Indicator

Program Button

1. Remove the four screws holding the control cover, and swing the panel down so the back side of the board is visible. Locate the Program Mode button (SW1). See **Figure 40**. Press and hold the button for 5-7 seconds until SET FACTORY DEFAULTS appears on the display. Release the program button.
2. Press the MODE button sequentially until the desired program event is reached. There are 5 different events that can be programmed. They appear in the sequence listed in **Figure 45**.

Set Factory Defaults	Resets board to factory default settings.
Defaults Set	
Clear Faults	Resets faults in the History File.
Faults Cleared	
Fahrenheit	Change from Fahrenheit to Celsius.
Celsius	
Spa Max Temp 104F	SPA setpoint maximum adjustment.
Pool Max Temp 104F	POOL setpoint maximum adjustment.

Figure 45. Programmable Events

Set Factory Defaults

Refer to step one above to access the program screen. SET FACTORY DEFAULT should appear on the screen. If it does not, press the MODE button until it appears on the digital display. Press and hold both UP and DOWN buttons for 5-7 seconds until DEFAULT SET appears. This operation resets the operating program to its factory default values.

Both the POOL and SPA setpoints will revert to 65°F (18°C) and both POOL and SPA maximum temperature settings will be 104°F (40°C). The CONTROL LOCKOUT PIN will be cleared and the control will resume normal operation.

Clear Faults

Refer to step one above to access the program screen. Press the MODE button until CLEAR FAULTS appears on the digital display. Press and hold both UP and DOWN buttons for 5-7 seconds until FAULTS CLEARED appears. This operation resets the Fault History file to “0” and clears all the stored faults.

Fahrenheit or Celsius

Refer to step one above to access the program screen. Press the MODE button until FAHRENHEIT or CELSIUS appears on the digital display. The UP or DOWN buttons will select FAHRENHEIT or CELSIUS on the temperature display. Choose the desired temperature scale.

Spa Max Temp – Spa Setpoint Maximum Adjustment

Refer to step one above to access the program screen. Press the MODE button until SPA MAX TEMP appears on the digital display. Using the UP and DOWN buttons will change the Maximum Temperature Setting to your desired value. The control can be set for a maximum of 107°F (42°C).

Pool Max Temp – Pool Setpoint Maximum Adjustment

Refer to step one above access into the program screen. Press the MODE button until POOL MAX TEMP appears on the digital display. Using the UP and DOWN buttons will change the Maximum Temperature Setting to your desired value. The control can be set for a maximum of 107°F (42°C).

Control Lockout

The heater is equipped with a Control Lockout feature to prevent unauthorized tampering or adjustment of the control settings. To lock out the controls, press the DOWN button and MODE button for 5 seconds. Choose a three digit PIN, using the UP and DOWN buttons to select the digits and the MODE button to lock in selections. Confirm your selection and record your PIN.

To unlock the controls, press any button to bring up the ENTER PIN menu. Enter the PIN that was used to lock the control. Note that power cycling will not clear the lockout. Successfully unlocking the control will display “LOCKOUT CLEARED.” Failure to enter the correct PIN will display “INVALID PIN.”

In the event that the user-selected PIN is lost or does not clear the Control Lockout, use the Program Button to SET FACTORY DEFAULTS. This will clear the PIN and allow normal operation and selection of a new PIN if desired.

NOTE: Both the POOL and SPA setpoints will revert back to 65°F (18°C) and the POOL and SPA maximum temperature settings will be 104°F (40°C). These setpoints will need to be readjusted to desired settings.

NOTE: The LCD temperature display may not agree with the temperature reading of your pool or spa thermometer. The heater reads the water temperature at the inlet. Due to the circulation characteristics of any pool or spa, the water temperature at the inlet to the heater may differ from that observed at a given location in the pool or spa.

Status and Diagnostics

The digital models are programmed to display a variety of status and diagnostic messages, depending on the operating conditions.

The following heat status messages are displayed in Pool, Spa, and Remote modes when there are no active fault conditions.

Display	Condition
Heating	Call-for-heat established, flame present.
Spark	Spark operating.
No Demand	Heat demand is satisfied.

Table O. Heater Status Messages - No Active Faults

The following conditions are displayed in Pool, Spa and Remote modes.

Display	Condition
Sensor Failure	Thermistor temperatures disagree by more than 2°F (1°C).
Sensor Open	Thermistor sensor failed open. Below -20°F (-29°C).
Sensor Short	Thermistor sensor failed short. Above 217°F (103°C).
Flame w/o CFH	Board is sensing flame when both main and pilot valves are commanded shut.
PV Output Fault	Pilot gas valve output is not in commanded state.
LoNox Tab Fault	Voltage is sensed at the Lo NOx terminal on a non -Lo- NOx heater (Lo NOx tab is intact).
Internal Fault	Board fault, replace board.
EEPROM Fault	Memory fault, reset setpoints, replace board if fault does not clear.
Clock/Fireman Sw	Time clock/fireman switch circuit is open.
Low Temp Lockout	Water temperature below 36°F (2°C).

Table P. Heater Status Messages - Active Faults

The following conditions are displayed only while there is a demand for heat present.

Display	Condition
Water Sw Open	Water pressure switch open.
Vent/Field Sw #1	Vent spill switch/field switch #1 open.
Hi Limit 1 is open	High limit 1 open. For ASME units ONLY, this is a manual-reset fault. Press the MODE button to reset.
Hi Limit 2 is open	High limit 2 open. For ASME units ONLY, this is a manual-reset fault. Press the MODE button to reset.
Rollout Sw Open	Rollout switch open.
Flow/Field SW #2	Field-supplied flow switch/field switch #2 open.
Ignition Lockout (Propane Tab Broken)	**Alternating with "No pilot sensed"** - Pilot flame not established within the required time (15 sec or 90 sec). **Alternating with "Main Ign Failure"** - Pilot flame lost during the 8 second trial to ignite the main burner.
Ignition Failure (Propane Tab Not Broken)	**Alternating with "No pilot sensed"** - Pilot flame not established within 90 seconds.
Ign 60 min Delay (Propane Tab Not Broken)	**Alternating with "Main Ign Failure"** - Pilot flame lost 4 times within the 8 second trial to ignite the main burner. Heater will lockout for 60 minutes before retrying.

Table Q. Heater Status Messages - Demand for Heat

High Limit Events

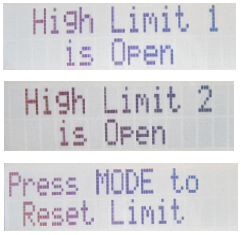

ASME units ONLY.

Figure 46. High Limit Events

TO ELIMINATE HIGH LIMIT EVENTS
1. Confirm circulation pump is running during heating cycle. 2. Pump should shutoff a minimum of 5-minutes after heating cycle ends. Failure to follow these steps may cause residual heat buildup - triggering a High Limit event. If issues persist, contact your service installer.

Remote Control Installation and Operation

⚠CAUTION: Before installing remote controls to the digital heaters, read the following: **The digital thermostat model is remote-ready in most cases. The digital liquid crystal display (LCD) shows the actual pool temperature, operating status, and service codes. See Figure 47. The touch pad on the control panel allows you to select the desired pool or spa temperature. It also indicates when a remote system is controlling the heater by displaying Remote in the display. When connecting the heater to a remote system, identify whether it is a two- or three-wire remote system. Select the appropriate instruction listed below to properly install the remote to the heater.**

Remote Operation

The heaters are equipped with the ability to work with external remote controls. The supplied 7-pin remote wiring connector supplies power out to either a toggle switch or the switch contacts of a third-party remote. The remote works by either making or breaking the circuit created by the remote wiring. Typically, a remote does not supply power to the heater, it only provides a switching function to turn the heater On or Off. **If your remote is supplying its own voltage to the heater, it will not work with this heater and may damage the digital circuit board.**

For operation of the heater using the onboard thermostatic controls with a time clock. **See "Time Clock/Fireman's Switch" on page 30.**

OFF Mode

Heating in the POOL Mode

Heating in the SPA Mode

Remote Mode

Figure 47. Remote Control Menu - Remote Operation

Activating the Remote

To activate or deactivate the remote function:

1. Press and hold the UP and DOWN arrow buttons for 3 to 5 seconds.

The second line of the display will alternate even when the unit is off ("No Demand").

NOTE: When in remote operation, the keypad mode and temp buttons are disabled.

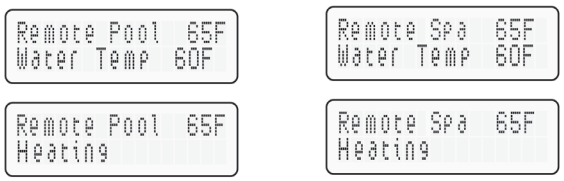

Figure 48. Remote Control Menu - Activation

Remote Control Wiring

⚠CAUTION: Electrostatic Discharge (ESD) damage can be caused by direct or indirect contact with the wiring or circuit board. When one walks to the heater area, an electrostatic charge accumulates on the body. Contact of a finger allows the body to discharge, possibly causing device damage. This damage can be limited if the service person discharges himself, following ESD preventive/removal practices, and holds on to the heater enclosure for 5 seconds before proceeding.

Important Installation Notes for Remote or External Wiring Configuration:

- Remote wiring must be run in a separate conduit.
- Remote wiring must not be run parallel to high voltage lines.
- For runs of under 30' (9 m), remote wiring should have stranded conductors with a minimum of 22 AWG, 600V, cable twisting 1.5" to 2.5" (3.8 to 6.4 cm) lay and jacketed.
- For runs over 30' (9 m), the conductors should be a minimum of 20 AWG, 600V, cable twisting 1.5" to 2.5" (3.8 to 6.4 cm) lay that is shielded and jacketed.
- Maximum cable length is 200' (61 m).
- For both two- and three-wire remote systems, the provided 7-pin wiring connector must be utilized.

NOTE: The remote wires must be connected to the 7-pin connector before the connector is plugged into the board.

2-Wire Remote Control (On-Off)

This application assumes that only one heating function (pool or spa) is required.

1. Turn on power to the heater.
2. For a 2-Wire Remote Control from a remote without its own sensor, push the MODE button to the “POOL” or “SPA” mode and set the desired setpoint (e.g. 102 °F (39°C) for Spa).
3. For a 2-Wire Remote Control from a remote with its own sensor, push the MODE button “POOL” or “SPA” mode and set the temperature to the highest setting available on the control. The actual setpoint will be controlled by the remote control.
4. Turn the MODE button to “OFF” and remove power from the heater.
5. On the “Remote Interface Harness”, connect the BLUE wire to one side of the “REMOTE” switch and connect the other side to either the ORANGE/BLACK wire for “SPA” operation or the BLACK/ORANGE wire for “POOL” operation. See **Figure 49**.

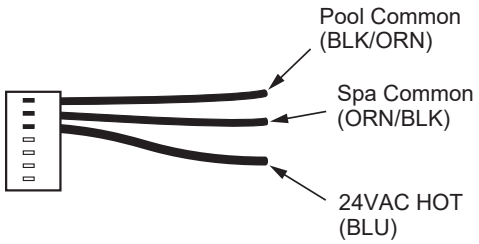

Figure 49. 7-Pin Remote Interface Harness

6. Attach wire nut on unused wire to the “Remote Interface Harness.”
7. Install the “7-Pin Remote Interface Harness” to the P8 connector and turn power “ON” to the heater. See **Figure 50**.

For activation of the remote control, see "Remote Operation" on **page 29.**

3-Wire Remote Control Using Three-Position Switch (Pool-Off-Spa, or Low-Off-High)

This application assumes that both heating functions (pool and spa) are required.

1. Turn on power to the heater.
2. Push the MODE button to the “POOL” or “SPA” mode and set the desired temperature for each (e.g. 80°F (27°C) for Pool and 102°F (39°C) for Spa).
3. Turn the MODE button to “OFF” and remove power from the heater.

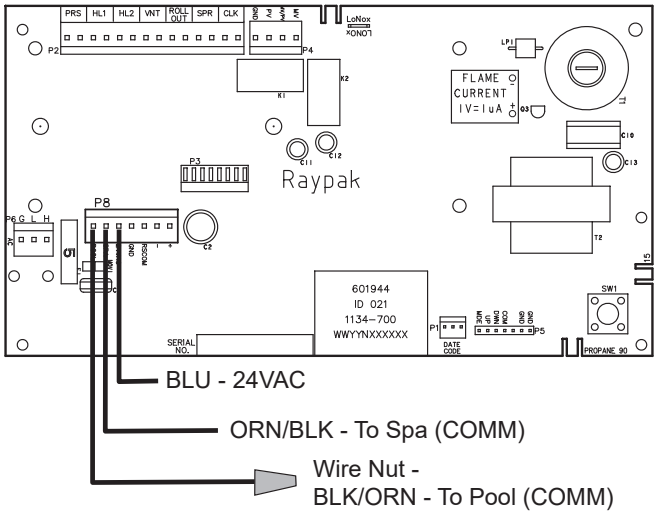

Figure 50. 2-Wire Remote Harness Installation on the P8 Connector of the Board

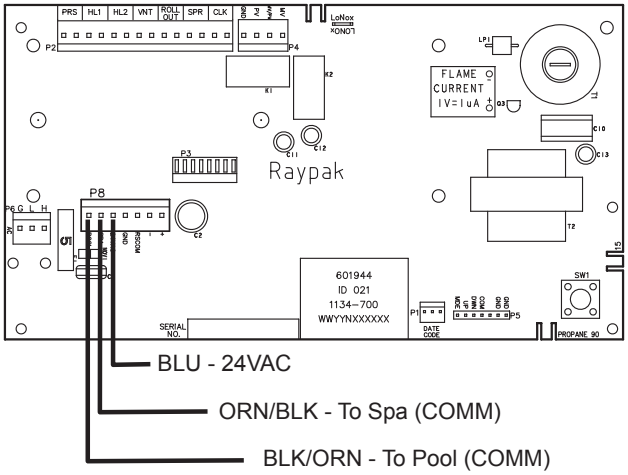

Figure 51. 3-Wire Remote Harness Installation on the P8 Connector of the Board

4. On the “Remote Interface Harness” connect the BLUE wire to one side of the “REMOTE” switch and connect the ORANGE/BLACK wire for “SPA” operation and the BLACK/ORANGE wire for the “POOL” operation. See **Figure 49**.
5. Install the “Remote Interface Harness” to the P8 connector and turn power ON to the heater. See **Figure 51**.

For activation of the remote control, see **"**Remote Operation" on **page 29.**

Time Clock/Fireman’s Switch

To operate the heater with a time clock, connect the timer to the fireman’s switch connection in the heater’s wiring. The time clock should be of the dual switch type and set to shut off the call-for-heat to the pool heater (chauffe-piscine) 15 to 20 minutes prior to shutting down the pool pump.

For digital heaters, the fireman's switch connection is located on the 14-pin header connected to the digital control board. Splice into the red wire jumper tagged – Where necessary add "Fireman's" switch circuit here – to connect the time clock.

The fireman's switch connection must be a dry contact and must not supply power to the heater. Powering the fireman's switch connection externally may damage the heater, and is not covered by warranty.

Digital heaters: Do not exceed 50 ft (15 m) of total wiring using 18 AWG stranded copper wire rated for 105°C minimum.

NOTE: When using a time clock, the digital heater will display "Clock/Fireman Sw" when the fireman's switch is open, indicating that the time clock has shut off the call-for-heat.

Water Pressure Switch

The water flow switch ensures that the heater operates only when the filter pump is in operation. It is located on the In/Out header. It is factory-set at 2.0 PSI for deck-level installations.

Water Pressure Switch Adjustment

When the heater is located below the level of the spa or pool, it may be necessary to adjust the pressure switch to compensate for the no-flow static head. If it is necessary to adjust the water pressure switch, utilize the following procedure:

1. Make sure the pool filter is clean before adjusting the switch.
2. Set the heater control to the OFF mode.
3. Turn the filter pump ON and confirm that the pressure switch is closed (use a multimeter to check). If the pressure switch fails to close, either the switch setting is too high or not enough pressure is being supplied by the filter pump.
4. Turn the heater ON.
5. Manually turn the pressure adjustment knob clockwise until the heater shuts off. (A flat screwdriver may be necessary if knob is too tight.)
6. Slowly turn the adjustment knob counter-clockwise until the heater calls for heat again.
7. Turn an additional 1/2 turn counter-clockwise.
8. While the heater is running, check the adjustment by turning the pump off and on several times. The burners should shut off immediately when the pump is turned off. If it does not, repeat the above steps until proper operation is observed.

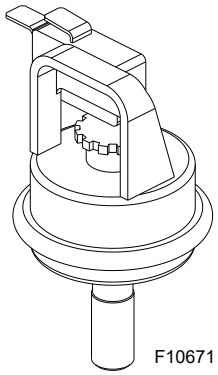

Figure 52. Water Pressure Switch Assembly

NOTE: The sheet metal access panel should be in place at all times to protect the water pressure switch from rain and other environmental factors.

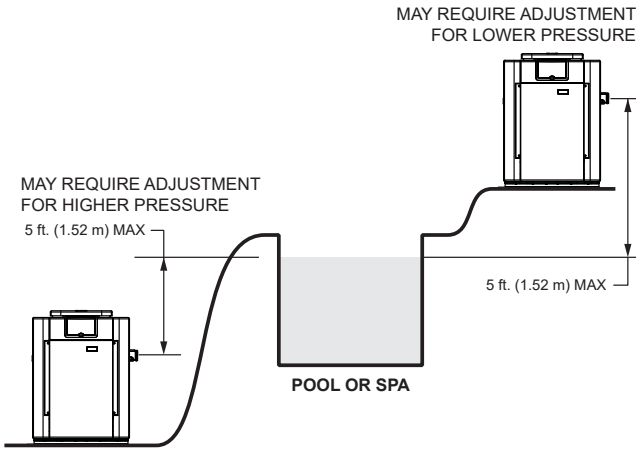

Figure 53. Pressure Switch Adjustment Requirements

NOTE: : If heater is installed outside of the limits shown, a switch rated for a higher pressure (11 psi / 76 kPa) may be used. A flow switch, mounted and wired adjacent to the heater, may be used in place of the factory-mounted pressure switch. See "ILLUSTRATED PARTS LIST" on page 47 for 11 psi / 76 kPa water pressure switch.

Two-Speed Pumps

In some cases, the flow on the low-speed is insufficient to operate the heater. This is apparent when the water pressure switch cannot be further adjusted or if the heater makes banging noises or shuts off on high limit. In these cases, the pump must be run at high speed when heating the water.

⚠CAUTION: Do not operate the heater without the function of a properly-adjusted water pressure switch or flow switch.

Flame Roll-Out Safety Switch

Heaters are equipped with a thermal cutoff device to prevent flame roll-out in the event the heat exchanger becomes blocked. This is a “single-use” type fusible link or thermal fuse, that must be replaced when disabled by an over-temperature condition, caused by excessive restriction in the heat exchanger flue passage.

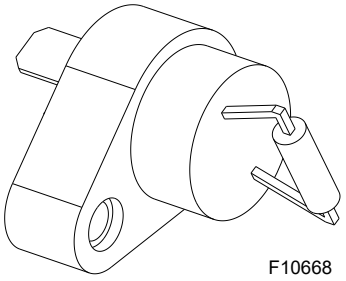

Figure 54. Flame Roll-Out Safety Switch

High Limits

The heater is equipped with two high limits.

On residential units (polymer headers), both are automatic and are located in the inlet/outlet header. Both are set at 135°F (57°C).

On commercial units (bronze headers), both are located on the inlet/outlet header. HL1 is automatic reset and set to open at 160°F (71°C). HL2 is automatic reset and set to open at 135°F (57°C).

NOTE: An erratic high limit is often characteristic of an internal heat exchanger problem, e.g. scale build-up, defective bypass. Refer to "TROUBLESHOOTING" on page 38.

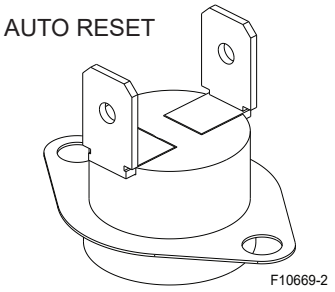

Figure 55. High Limit Switches

High Limit Removal

1. Shut off main electrical power switch to heater.
2. Remove inlet/outlet sheet metal access panel.
3. Remove defective high limit and replace with the correct new high limit.
4. Replace access panel.

Pilot Safety

The heater employs a pilot safety which closes the main gas valve within 8/10ths of a second whenever the pilot flame is interrupted. The pilot flame is automatically lit when the device is powered. The heater performs its own safety check and opens the main valve only after the pilot is proven to be lit.

Burner Tray Removal

1. Shut off main electrical power switch to heater.
2. Shut off gas upstream of heater.
3. Remove front door.
4. Disconnect gas line from gas valve.
5. Remove (2) screws that mount burner tray to unit, and (2) screws that secure gas valve to jacket.
6. Disconnect wires that terminate at gas valve.
7. Disconnect hi-tension wire from PC board.
8. Carefully slide out burner tray assembly.
9. Reverse above procedure to reinstall.

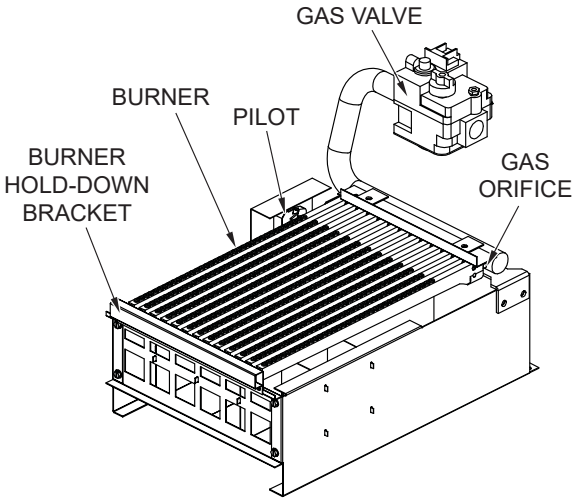

Figure 56. Burner Tray Assembly

Gas Valve Removal

1. Shut off gas supply to the heater. Remove gas piping to gas valve inlet.
2. Disconnect wires, pilot tubing and bleed line, if required.
3. Remove burner tray from heater.
4. Turn vertical gas pipe from manifold slightly and unscrew gas valve.
5. Reverse above procedure to reinstall.

Main Burner And Orifice Removal

1. Remove burner tray, following above procedure.
2. Remove screws and burner hold-down bracket.

NOTE: If the heat exchanger is sooted badly, the burner hold-down bracket and spacer can become distorted from direct-flame impingement and this usually necessitates replacement of these parts.

3. Lift burners from slotted spacers and slide from orifices. Clean with a wire brush.
4. Orifices usually do not need to be replaced. To clean, run either copper wire or wood toothpick through orifice. **Do not** enlarge hole. To remove orifice, use a socket wrench and remove from manifold. **DO NOT** over-tighten when reinstalling.

Pilot Removal And Cleaning

1. Disconnect pilot tubing and wires from gas valve.
2. Remove pilot assembly from burner tray.
3. Remove pilot from bracket.
4. Remove pilot orifice and air opening, and clean with wire or small brush.

⚠CAUTION! Do not enlarge hole in pilot orifice.

5. Reverse above procedure to reinstall.

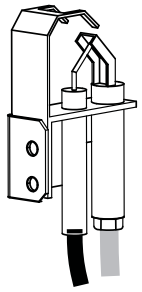

Figure 57. Digital Pilot

Heat Exchanger Removal

1. Shut water, gas and electricity off, close valves and relieve pressure, then remove relief valve. Remove side access panels.
2. Remove top jacket holding screws.
3. Remove rear top panel.
4. Remove screws mounting the rain shield to the rear panel. Also remove the screws that mount the rain shield to the sway brace. Remove rain shield.
5. Remove the four (4) screws holding down the flue collector. Remove the flue collector.
6. If ProTek Shield Assy is attached to the heater; disconnect flange nuts on Inlet/Outlet header, remove ProTek Shield Assy bonding wire from heat exchanger stud, loosen union at gas pipe and slide heater away from piping.
7. Lift heat exchanger straight up using caution not to damage refractory.
8. Reverse above procedure to reinstall. Make sure the insulation strips are properly replaced on top of the refractory retainer.

Tube Cleaning Procedure

Establish a regular inspection schedule, the frequency depending on the local water conditions and the severity of service. Do not let the tubes clog up solidly. Clean out deposits over 1/16" (1.6 mm) in thickness.

The heater may be cleaned from the return header side, without breaking pipe connections. It is preferable, however, to remove both headers for better visibility through the tubes and to be sure the ground-up lime dust does not get into the system. Note that you do not remove the top panel or the heater exchanger, generally.

After reaming, mount the wire brush in place of the auger and clean out debris remaining in the tubes.

Another method is to remove the heat exchanger, ream tubes and immerse heat exchanger in non-inhibited de-scale solvent for severe scale build-up.

Figure 58. Tube Cleaning Kit (P/N: 052871F)

Desooting Procedure

⚠WARNING: Soot Is Combustible. Exercise Extreme Care.

Soot will clog areas between fins and cause eventual tube failure. Any sign of soot at the base of the burners or around the outer jacket indicates a need for cleaning.

1. Remove top and flue collector from cabinet.
2. Remove “V” baffles from heat exchanger.
3. Remove burner tray. See page **32**.
4. If ProTek Shield Assy is attached to the heater, remove ProTek Shield Assy bonding wire from heat exchanger stud.
5. Remove heat exchanger from the heater and wash with a garden hose, making sure soot is removed from spaces between fins.
6. Reverse above procedure to reinstall.

NOTE: In extreme cases it may be necessary to do steam cleaning at the local car wash. DO NOT WIRE BRUSH.

Combustion Chamber Removal

To remove combustion chamber, you must first have removed the heat exchanger.

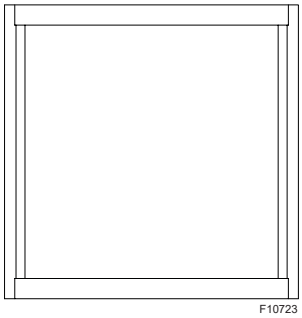

Figure 59. Refractory Panels

⚠WARNING: When removing the burners or heat exchangers, take precautions to avoid creating airborne dust and avoid inhaling airborne fibers. When cleaning spills, use wet sweeping or High Efficiency Particulate Air (HEPA) filtered vacuum to minimize airborne dust. Use feasible engineering controls such as local exhaust ventilation or dust collecting systems to minimize airborne dust. Wear appropriate personal protective equipment including gloves, safety glasses with side shields, and appropriate NIOSH-certified respiratory protection, to avoid inhalation of airborne dust and airborne fiber particles.

Unitherm Governor (U.G.) Replacement

1. Shut water, gas and electricity off, close valves and relieve pressure.
2. Drain heat exchanger.
3. Remove retainer plug located next to the outlet pipe connection on polymer header models.
4. Unsnap old U.G. to remove from retainer plug. Snap in new U.G.
5. Reinstall retainer plug, taking care to lubricate gasket with a non-petroleum based grease such as AquaLube.

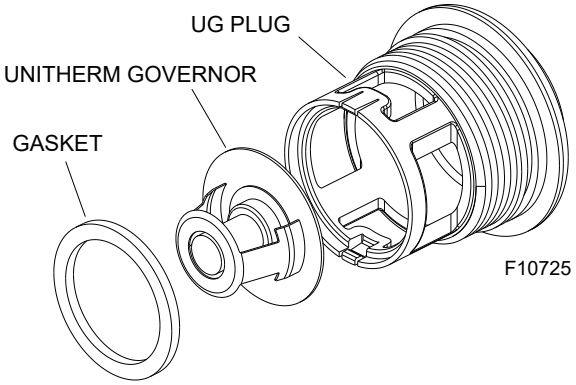

Figure 60. Unitherm Governor - Polymer

To test the operation of the Unitherm Governor - Polymer, place in hot water (over 110°F [43°C]) and watch for movement against spring. If there is no movement, replace unit.

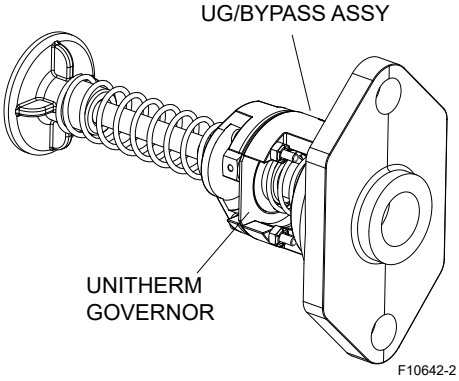

Figure 61. Unitherm Governor/Bypass Valve Assy – ASME

NOTE: The U.G. on bronze header models (ASME) can only be replaced by replacing the entire Unitherm Governor/Bypass Valve Assembly.

8. OPERATING INSTRUCTIONS

Before Start-Up

Burners

Keep heater area clear and free from combustibles, flammable liquids and chemicals. Do not obstruct the flow of combustion and ventilation air.

Water

Water must be flowing through the heater during operation. Ensure that the system is filled with water and that the pump is operating.

Start-Up Procedures

Your pool/spa heater has been designed for years of safe and reliable pool/spa water heating. It is available with electronic ignition. ASME-certified units typically used in commercial applications, are also available. This manual provides installation, operation, maintenance, and service information for these heaters.

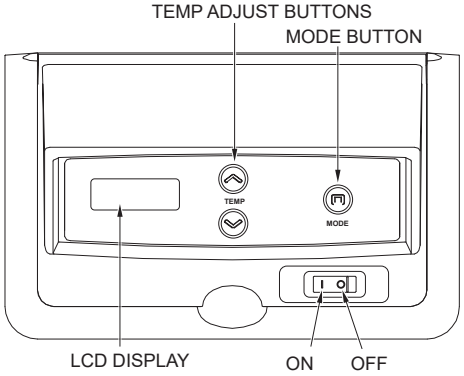

Figure 62. Heater Control Toggle Switch

If your heater has been installed correctly, operating the heater is an easy task. The upper front panel of the heater contains the control center that allows you to turn the heater On or Off and adjust the temperature settings for the pool or spa. The temperature range is factory set from 65°F (18°C) to 104°F (40°C). See **Figure 62** for location of toggle switch to turn the heater On and Off.

See **Section 7** for additional details about the use of the controls in the Control Adjustments subsection.

After Start-Up

Feel the inlet and outlet pipes. Outlet pipe should be only slightly warmer than the inlet. It should not be hot.

⚠WARNING: Should overheating occur or the gas supply fail to shut off, turn off the manual gas control to the appliance.

Visual inspection

With the heater on, remove the door and make a visual check of the pilot and burner. The flame should be blue with a well-defined pattern.

A yellow or "floating" flame indicates restricted air openings or incorrect orifice size. Should this occur, shut the heater off and contact your installer or gas supplier.

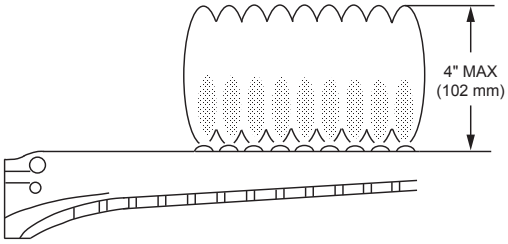

Figure 63. Main Burner Flame

Water Pressure Switch

A water pressure switch is provided in the heater to shut off the burners in the event that water supply is interrupted. It is very important to verify that the switch electrically opens and shuts off the gas valve when water flow to the heater is interrupted. Otherwise rapid and severe damage will likely occur to the heater.

The water pressure switch should be checked and adjusted for proper operation by a qualified service person at the time of installation and periodically checked thereafter. Refer to **"Water Pressure Switch Adjustment" on page 31** of this manual.

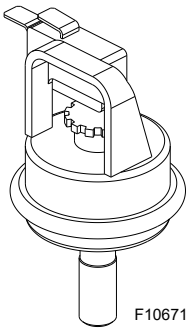

Figure 64. Water Pressure Switch

⚠WARNING: Operation of the heater without water circulation will cause rapid and severe damage to the heater. Such damage is not covered under warranty.

OPERATING INSTRUCTIONS AND SHUTOFF PROCEDURES
ELECTRONIC IGNITION DIGITAL MODELS
(AUTOMATICALLY-LIGHTED PILOT)

FOR YOUR SAFETY READ BEFORE LIGHTING

A. This appliance is equipped with an ignition device which automatically lights the pilot. Do not try to light the pilot by hand.

B. BEFORE OPERATING, smell all around the appliance area for gas. Be sure to smell near the floor because some gas is heavier than air and will settle on the floor.

WHAT TO DO IF YOU SMELL GAS:
*Do not try to light any appliance.
*Do not touch any electric switch; do not use any phone in your building.
*Immediately call your gas supplier from a neighbor's phone. Follow the gas supplier's instructions.
*If you cannot reach your gas supplier, call the fire department.

C. Use only your hand to push in or turn the gas control knob. Never use tools. If the knob will not push in or turn by hand, do not try to repair it. Call a qualified service technician. Force or attempted repair may result in a fire or explosion.

D. Do not use this appliance if any part has been under water. Immediately call a qualified service technician to inspect the appliance and to replace any part of the control system and any gas control which has been under water.

LIGHTING INSTRUCTIONS

1. **STOP!** Read the safety information above.
2. Set the thermostat to the lowest setting.
3. Turn off all electrical power to the appliance.
4. This appliance is equipped with an ignition device which automatically lights the pilot. Do not try to light the pilot by hand.
5. Remove heater door panel.
6. For **Honeywell valve**: Turn gas control knob clockwise to "OFF". For **Robertshaw valve**: Models 266A/406A: Turn gas control knob clockwise to "OFF". Model 206 Push in and move gas control lever counter-clockwise to "OFF" position.
7. Wait 5 minutes to clear out any gas. If you then smell gas, **STOP!** Follow "B" in the safety information above. If you don't smell gas, go to the next step.
8. Turn gas control knob counter-clockwise to "ON". (Honeywell VR8340 and Robertshaw 7000).
9. Replace heater door panel.
10. Turn on all electrical power to the appliance.
11. Set thermostat to desired setting.
12. If the appliance will not operate, follow the instructions "To Turn Off Gas To Appliance" and call your service technician or gas supplier.

HONEYWELL VR8340 GAS VALVE IID

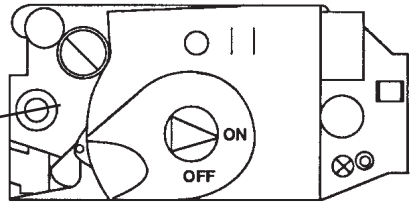

ROBERTSHAW 7200 GAS CONTROL LEVER SHOWN IN "OFF" POSITION

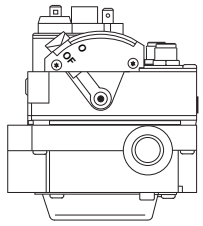

TO TURN OFF GAS TO APPLIANCE

1. Set the thermostat at the lowest setting.
2. Turn off all the electrical power to the appliance if service is to be performed.
3. Remove heater door panel.
4. For **Honeywell VR8340 and Robertshaw 7000 gas valve.**
   Turn gas control knob clockwise to "OFF".
   Make sure knob rests against stop.
5. Replace heater door panel.

9. MAINTENANCE AND CARE

⚠WARNING: Check the heater for possible rodent nests after long periods of non-use.

To be followed one month after start-up and then semi-annually.

1. Inspect the top of the heater and drafthood for soot, a sticky black substance around finned tubes and “V” baffles, and open flue gas passageways. Any visible soot should be cleaned for proper operation.

⚠CAUTION: Soot may be combustible. Wet sooted surfaces completely prior to cleaning. Do not use steel wire brush.

2. Clean main burners and pilot burner of dust and lint.
3. Inspect and operate all controls, gas valve and pressure relief valve (if equipped).
4. Make visual check of the burner and pilot flames. Yellow flame means restriction of the air openings. Lifting or blowing flame indicates high gas pressure. Low flame means low gas pressure. Should the latter occur, shut the heater off and contact your gas supplier or qualified service agency. See **Figure 63** and **Figure 72.**
5. On indoor heaters, clean room intake openings to ensure adequate flow of combustion and ventilation air.

⚠CAUTION: Combustion air must not be contaminated by corrosive chemical fumes which can damage the heater. Such damage is not covered under warranty.

6. Keep area around heater clear and free from combustible materials, gasoline and other flammable and corrosive vapors and liquids.

If Heater Will Not Fire:

If you have no electrical power, it may be that your “circuit breaker” has tripped. Try re-setting it.

If you have electrical power but the heater will not fire check the following or see **"TROUBLESHOOTING" on page 38**.

1. The time clock must be in the “ON” position.
2. Your pump strainer basket may be full. If so remove debris.
3. Your filter may be dirty. If so, backwash or clean filter. (To tell if your filter is dirty, look to see if the filter pressure is higher than usual).
4. The pump may have lost its prime and be running dry. Check the pressure on the filter. If there is no pressure, then you are not moving water (or your gauge is broken). Try to get the pump to run at its normal flow rate.

Cold Weather Operation

Important Freeze Information

MODERATE CLIMATE: Heater operation can continue during short-term cold spells. When temperatures are between 0°F (-18°C) and 32°F (0°C), flow (continuous pump operation) must be maintained.

⚠CAUTION: Do not use the heater to maintain water temperatures just above freezing or for freeze protection. When heater is used during freezing weather, care must be taken to avoid freeze-ups. Continuous pump operation is a must. Additional protection may be required. The heater is not warranted against freeze-ups.

COLD CLIMATE: Prolonged operation with water temperatures below 50°F (10°C) is not recommended. When starting the heater with water temperatures below 50°F (10°C), operate the heater continuously until higher temperatures are reached. Operating the heater for prolonged periods with pool water below 50°F (10°C) can seriously damage the heater, and is not covered by the warranty. For cold climate areas, please follow the winterizing procedures listed below.

Winterizing the Pool and Spa Heater

Heaters installed outdoors in freezing climate areas may be shut down for the winter. Observe the following procedure for winterizing the heater:

1. Turn off gas valve, manual gas valve, and electrical supply to the heater.
2. Remove the ProTek Shield™ Assembly (if attached). Remove the heat exchanger inspection panel on the side opposite water piping to gain access to the drain plug on the return header. Open drain plug on return header. See **Figure 65** and **Figure 66.**

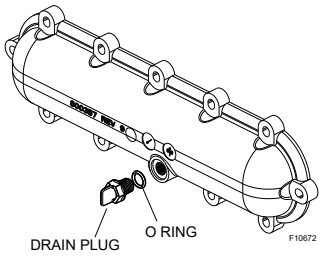

Figure 65. Return Header Drain Plug - Residential ("P" Prefix Model)

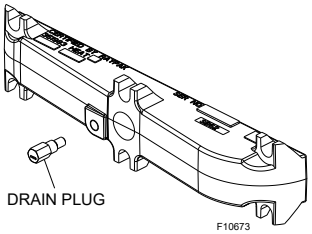

Figure 66. Return Header Drain Valve - Commercial ("B" Prefix Model)

10. TROUBLESHOOTING

IMPORTANT NOTICE: These instructions are intended for the use of qualified personnel who are specifically trained and experienced in the installation of this type of heating equipment and related system components. Installation and service personnel may be required by some states to be licensed. Persons not qualified shall not attempt to install this equipment nor attempt repairs according to these instructions.

Problem	Possible Cause	Corrective Action
Harmonics, or whining noise	U.G. inoperative	Check movement by putting in hot water (110°F [43°C] or higher)
	*Debris or restriction in system	Locate the restriction and remove. Flush system and clean
	*Debris in gas line	Remove debris or blow out gas line
	Low flow	Scale forming in heat exchanger - clean heat exchanger and check pool pH and total alkalinity
	When the above listed recommendations do not generate acceptable results, the following service kits are recommended:	
	105F UG Service Kit:	**Used on Models:**
	018759F	206-207
	018759F	266-267
	018758F	336-337
	018758F	406-407
Heater going on and off continuously	Dirty filter	Clean or replace filter
	Low water level in pool	Raise water level
	External bypass setting out of adjustment	Adjust bypass
	*Pressure switch out of adjustment	Adjust pressure switch
Liming or scale forming in exchanger	Pool water	See Water Chemistry on page **5**
	Bypassing too much water	Inspect bypass for movement, if no movement, replace
	U.G. not functioning	Replace if no movement when heated
Sooting	High flow rates	Reduce by adding manual bypass valve Adjust manual bypass valve until heater outlet water temp is between 105°F and 110°F (40°C and 43°C)
	U.G. inoperative	Check movement by putting in hot water (110°F [43°C] or higher). If no movement, replace
	*Air starvation	Refer to installation instructions
	*Improper venting	Follow recommended installation instructions
	*Insects or debris clogging burner intake ports	Clean burners
Pilot outage or "Weak Flame" signal	Low gas pressure	Adjust gas pressure
	Restricted/dirty pilot	Clean pilot
	Weak pilot generator	Replace pilot
Yellow lazy flame	Low gas pressure	Adjust gas pressure
	*Insects or debris clogging burner intake ports	Clean burners
Outer jacket very hot (paint blistered)	*Broken refractory caused by shipping damage or improper combustion	Replace refractory panels
	Excessive sooting of heat exchanger	Determine cause of sooting and correct

* Indicates symptom which usually occurs on initial start-up.

TROUBLESHOOTING (CONT:)

Problem	Possible Cause	Corrective Action
Takes too long to heat pool or spa	Under-sized heater	Calculate heating capacity of heater $\frac{\text{Htr. output (MBTUH)}}{\text{Pool gallonage x 8.33}}$ or refer to heater sizing chart This does not take into account heat loss due to weather
	Filter not running long enough	Reset time clock
	Dirty filter	Clean filter
	Gas line or meter undersized	Refer to installation instructions
Leaking at well	Overacid	Replace well and maintain proper water chemistry
Leaking at heat exchanger	Overacid	Replace heat exchanger and maintain proper water chemistry
Gasket brittle and leaking - (overheated)	Heater running after pump shuts off	See Pressure switch adjustment
	Refractory damage	Replace refractory
	Sooted heater	Determine cause of sooting and correct

Digital - Flow Chart

⚠WARNING: HIGH VOLTAGE For qualified technicians ONLY

NOTE: Some heaters may be equipped with an ignition module that shuts off pilot gas if pilot fails to light. To reset, interrupt power to heater.

START

TURN GAS SUPPLY OFF. TURN THERMOSTAT (CONTROLLER) TO CALL-FOR-HEAT

NOTE: Before troubleshooting, familiarize yourself with the start-up and check-out procedure.

POWER TO PC BOARD? (24 V NOMINAL)

NO → Check line voltage power, low voltage transformer, limit controller, thermostat (controller) and wiring. Make sure that the line voltage is **NOT** 208 VAC.

YES ↓

SPARK ACROSS IGNITER/SENSOR GAP?

NO → Pull ignition lead and check spark at PC board.

Spark Okay?

YES ↓

NO → Replace the PC board.

- Check ignition cable, ground wiring, ceramic insulator and gap, and correct.
- Check boot of the ignition cable for signs of melting or buckling. Take protective action to shield cable and boot from excessive temperatures.

YES ↓

TURN GAS SUPPLY ON PILOT BURNER LIGHTS?

NO →

- Check that all manual gas valves are open, supply tubing and pressures are good, and pilot burner orifice is not blocked.
- Check electrical connections between PC board and pilot operator on gas control.
- Check for 24 VAC across PV-MV/PV terminals on PC board. If voltage is okay, replace gas control; if not, replace PC board.

NOTE: If PC board goes into lockout, reset system. Lockout is used on L.P.G. models.

YES ↓

MAIN BURNER LIGHTS?

NO →

- Check for 24 VAC across MV-MV/PV terminals. If no voltage, replace module.
- Check electrical connections between PC board and gas control. If okay, replace gas valve or gas control operator, i.e. pilot gas valve, flow switch etc.

YES ↓

SYSTEM RUNS UNTIL CALL-FOR-HEAT ENDS?

NO → NOTE: IF PC board goes into lockout, reset system.

- Check continuity of ignition cable and ground wire.

NOTE: If ground is poor or erratic, shutdowns may occur occasionally even though operation is normal at the time of checkout.

- Check that pilot flame covers flame rod and is steady and blue.
- If checks are okay, replace PC board.

YES ↓

CALL-FOR-HEAT ENDS SYSTEM SHUTS OFF?

NO →

- Check for proper thermostat (controller) operation.
- Remove MV lead at module; if valve closes, recheck temperature controller and wiring; if not, replace gas valve.

YES ↓

TROUBLESHOOTING ENDS

Control Logic - Flow Chart - Digital

Power On

Is the water temperature displayed?

NO

- Check On/Off switch (under lid on control panel)
- Check for 120/240 volts to the transformer (time clock, circuit breaker, wire connections)
- Check for 24 volts to Circuit Board (P6 connector)

YES

Push **MODE** switch to select "**Pool**" or "**Spa**"

Push Temp arrow to scroll to desired temperature

Water temperature and set temperature displayed?

NO

Is a fault code displayed and flashing?

NO

"**Remote**" and Water Temperature displayed (a remote control is controlling the heater)

Note: Disconnect the remote by turning the remote function off. See page 30 for instructions.

YES

Diagnostic Readouts

"**Sensor Failure**," "**Sensor Open**" or "**Sensor Short**" - Temperature sensor out of range (replace sensor)

Sensor Failure

Inspect thermistor, wires, and connector at Terminal P1
Check resistance value of the thermistor. Reference to chart below.
Replace thermistor if not within 10% of values shown below.
If okay, replace Circuit Board.

Sensor resistance at various temperatures

Temp Degrees F	40	50	60	70	80	90	100	106
Temp Degrees C	4	10	15	21	27	32	38	41
Resistance (k)	261.1	199.0	153.1	118.8	93.0	73.3	58.3	51.0

If okay, replace Circuit Board

"**Water Sw Open**"	Pressure switch. Verify water flow and pressure CLEAN FILTER / STRAINER - backwash if neccessary.
"**Hi Limit 1 Fault**" "**Hi Limit 2 Fault**"	High limit switch. Verify water flow. Inspect internal Thermostat (Unitherm Governor) and bypass valve. Press manual button on HL1 fault on bronze (ASME) models.
"**Rollout Sw Open**"	Rollout Sensor - Check for blocked heat exchanger and soot. Press manual reset button.
"**Clock/Fireman Sw**"	Fireman or Remote switch connected to safety loop is in the OFF mode.
"**Vent/Field Sw #1**"	Vent switch open. Check connections to the board. If extractor installed, troubleshoot extractor.
"**Ignition Lockout**"	Ignition lockout. Check power at pilot valve. Check spark (bad ignition circuit or hi-tension wire). Verify clean pilot orifice and clearance from igniter to ground rod.
"**Ignition Failure**"	Ignition failure. Verify gas to the heater. Verify valve operation (gas present at tube fitting).

YES

"**Heating**" will display briefly

"**Spark**"

Flame icon displayed and flashing? OR Water temp displayed? (pilot lit and rectified)

NO

YES

Heater Fired?

NO

Verify power at MV on P-4 Terminal on digital circuit board. Verify power to valve MV voltage. (Replace valve.)

YES

END

11. REPLACEMENT PARTS

NOTE: To supply you with the correct part, it is important that you supply the heater model number, serial number and type of gas when applicable.

Any part returned for replacement under standard company warranties must be properly tagged with a return parts tag, completely filled in with the heater serial number, model number, etc., and shipped to the Company freight prepaid.

If determined defective by the Company and within warranty, a like part or equal substitution will be returned, freight collect. Credit will not be issued.

MANUFACTURER:

2151 Eastman Avenue
Oxnard, Ca 93030

12. ILLUSTRATED PARTS LIST

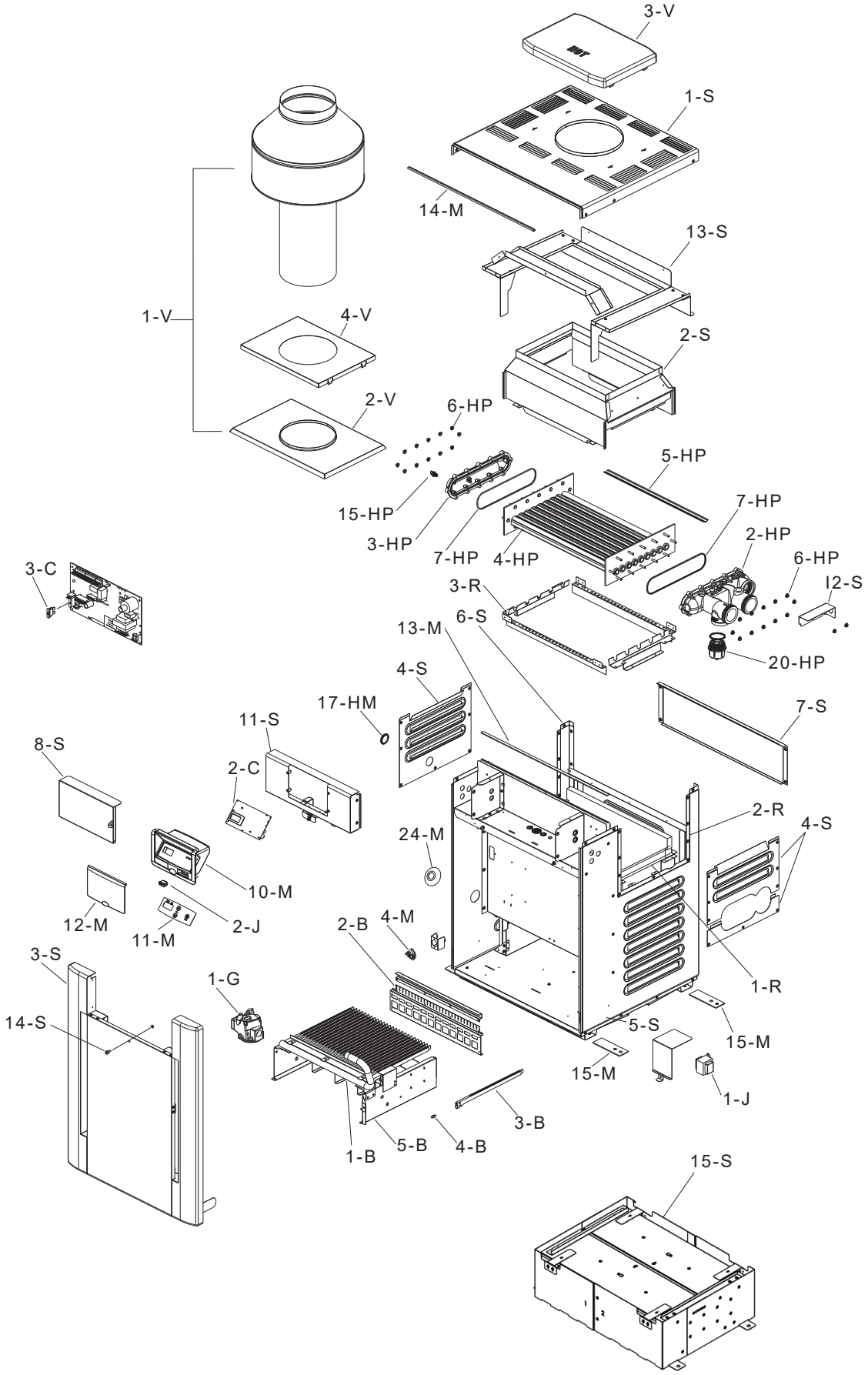

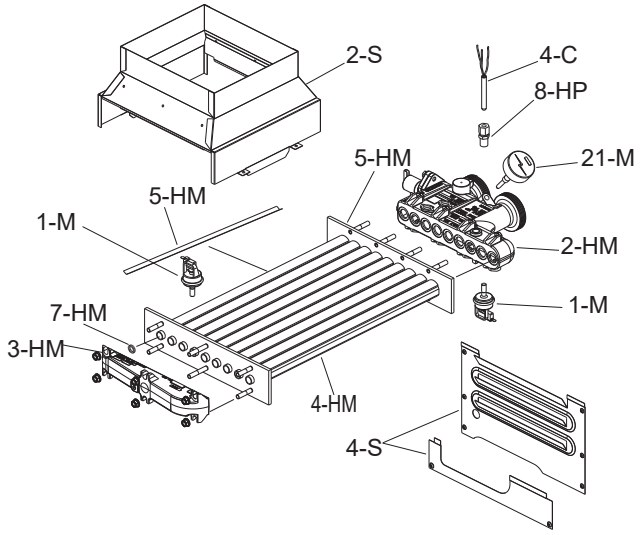

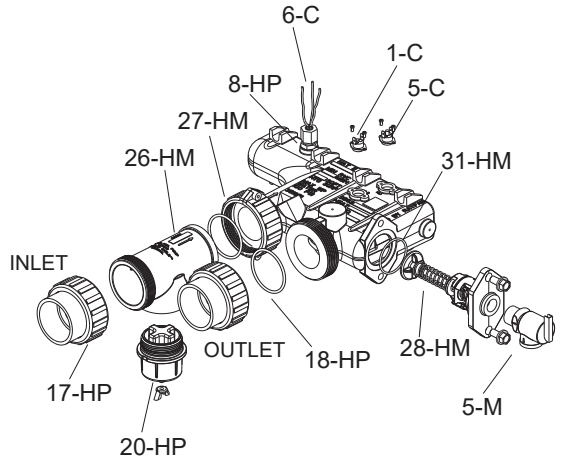

FOR UNITS WITH ASME BRONZE HEADERS FROM 12/2019
(PROTEK SHIELD AVAILABLE ON ASME HEATERS AFTER END OF Q3 2020)

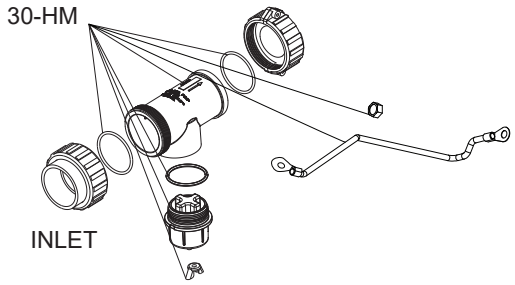

PROTEK SHIELD ADAPTER KIT

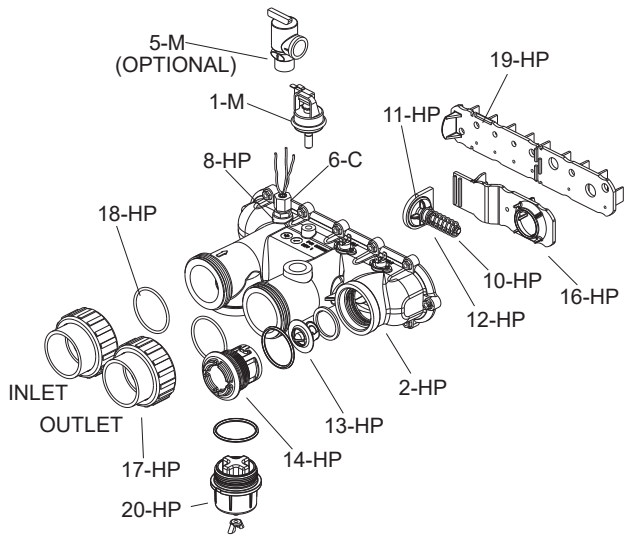

FOR UNITS WITH POLYMER HEADERS FROM 10/2019

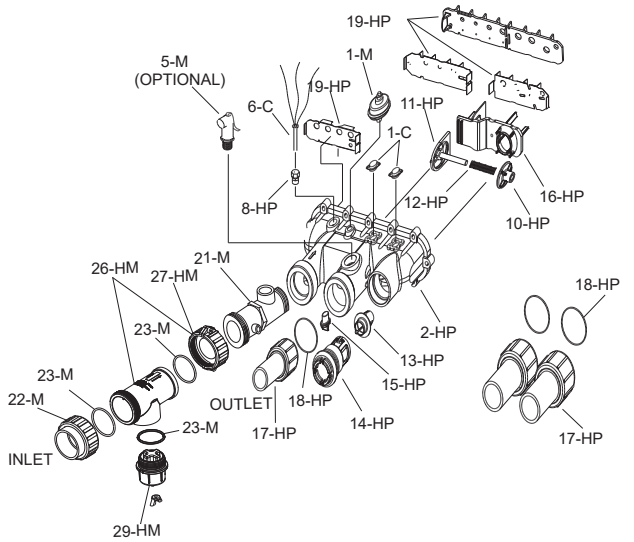

PROTEK ADAPTER AND POLYMER UNITS PRIOR TO 10/2019

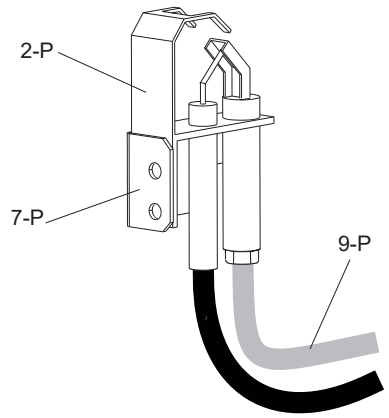

HONEYWELL IID ATMOSPHERIC PILOT

CALL OUT	DESCRIPTION		206A	266A	336A	406A
B	**BURNER TRAY - SPECIFY ELEVATION***					
1-B	Cu HX, or ASME HX (Cu or Cupro) NAT #50 ORIFICE	Burner Tray w/Burners Nat (sea level)*	010391F	010392F	010393F	010394F
		Burner Tray w/Gas Valve Nat IID (sea level)*	010407F	010408F	010409F	010410F
	Cu HX, or ASME HX (Cu or Cupro) PRO #57 ORIFICE	Burner Tray w/Burners Pro (sea level)*	019206F	019207F	019208F	019209F
		Burner Tray w/Gas Valve Pro IID (sea level)*	010411F	010412F	010413F	010414F
	Cupro HX NAT #51 ORIFICE	Burner Tray w/Burners Nat (sea level)*	019210F	019211F	019212F	019213F
		Burner Tray w/Gas Valve Nat IID (sea level)*	019218F	019219F	019220F	019221F
	Cupro HX PRO #58 ORIFICE	Burner Tray w/Burners Pro (sea level)*	019222F	019223F	019224F	019225F
		Burner Tray w/Gas Valve Nat IID (sea level)*	019226F	019227F	019228F	019229F
		Burner Tray w/Gas Valve Pro IID (sea level)*	019230F	019231F	019232F	019233F
2-B	Burner Spacer/Hold Down Kit		010415F	010416F	010417F	010418F
3-B	Burner		100-10009117	100-10009118	100-10009119	100-10009120
4-B	Burner Orifice (TO BE ORDERED BASED ON RATING PLATE AND ELEVATION)					
	Natural Gas					
	Burner Orifice #50* (0-1999 ft elevation)		100-10006050	100-10006051	100-10006052	100-10006053
	Burner Orifice #51* (2000-5999 ft elevation)		100-10006054	100-10006055	100-10006056	100-10006057
	Burner Orifice #52* (6000-8999 ft elevation)		100-10004695	100-10004696	100-10004697	100-10004698
	Burner Orifice #53* (9000 + ft elevation)		100-10006058	100-10006059	100-10006060	100-10006061
5-B	Burner Tray w/o Manifold w/o burners		010421F	010422F	010423F	010424F
C	**CONTROLS**		**206A**	**266A**	**336A**	**406A**
1-C	High Limit Auto-Reset 135°F Deg Surface Mount		006725F	006725F	006725F	006725F
2-C	P.C. Board/Control		100-10000345	100-10000345	100-10000345	100-10000345
3-C	Fuse 5 AMP (P.C. Board)		013733F	013733F	013733F	013733F
4-C	Temperature Sensor IID Units		009577F	009577F	009577F	009577F
5-C	High Limit Auto-Reset 160°F Surface Mount (ASME Only)		018304F	018304F	018304F	018304F
G	**GAS VALVE**		**206A**	**266A**	**336A**	**406A**
	Combination Valve - Nat. IID		003900F	003900F	003900F	003900F
	Combination Valve - Pro. IID		004306F	004306F	004306F	004306F
HP	**HEAT EXCHANGER - POLYMER (RESIDENTIAL ONLY)**		**206A**	**266A**	**336A**	**406A**
1-HP	Heat Exchanger Assy Copper ***					
	Units manufactured from 10/2019		017994F	017995F	017996F	017997F
	Heat Exchanger Assy Cupronickel ***					
	Units manufactured from 10/2019		017998F	017999F	018000F	018001F
2-HP	Inlet/Outlet Header Complete					
	Units manufactured from 10/2019		017959F	017959F	017959F	017959F
	Inlet/Outlet Header (Includes 6-HP)					
	Units manufactured from 10/2019		017965F	017965F	017965F	017965F
3-HP	Return Header (Includes 6-HP)		100-10008782	100-10008782	100-10008782	100-10008782
4-HP	Tube Bundle Copper ** & ***		010059F	010060F	010061F	010062F
	Tube Bundle Cupronickel ** & ***					
	Units manufactured from 7/2013		014930F	014931F	014932F	014933F
5-HP	Baffle (Copper Heat Exchanger)		010038F	005261F	010040F	010041F
	Baffle (Cupronickel Heat Exchanger)					
	Units manufactured from 6/2013		014934F	014935F	014936F	014937F
	Units manufactured prior to 6/2013		010038F	005261F	010040F	010041F
6-HP	Flange Nut Kit (1/4-20)		008259F	008259F	008259F	008259F
7-HP	O-Ring Gasket (2)		006713F	006713F	006713F	006713F
8-HP	Sensor Adapter Digital Electronic		006714F	006714F	006714F	006714F
9-HP	Bypass Kit		006715F	006715F	006715F	006715F
10-HP	Bypass Valve		006716F	006716F	006716F	006716F
11-HP	Bypass Dam / Shaft		006717F	006717F	006717F	006717F
12-HP	Bypass Spring (All Sizes Included)		006718F	006718F	006718F	006718F
13-HP	Unitherm Governor		006719F	006719F	006719F	006719F
14-HP	Unitherm Governor Plug		006720F	006720F	006720F	006720F
15-HP	Drain Plug		100-10008775	100-10008775	100-10008775	100-10008775
16-HP	Inlet/Outlet Header Dam		N/A Use 19-HP	N/A Use 19-HP	N/A Use 19-HP	N/A Use 19-HP
17-HP	2" CPVC Connector & Nut (2)		006723F	006723F	006723F	006723F
18-HP	O-Ring (2)		006724F	006724F	006724F	006724F
19-HP	Inlet/Outlet Header Baffle w/Header Dam		006826F	006826F	006826F	006826F
20-HP	ProTek Shield™ Assembly		017960F	017960F	017960F	017960F

*FOR INSTALLATION AT OVER 2,000 FEET ABOVE SEA LEVEL, DERATE 4% PER 1,000 FEET ABOVE SEA LEVEL. Refer to the heater's rating plate.

**WARNING: The Hydraulic conditions or water chemistry that caused the tube bundle to fail have very likely also damaged the bypass valve and Unitherm Governor. Raypak recommends you replace the Unitherm Governor and inspect the bypass assembly. Failure to do so could cause premature failure of this replacement part.

***WARNING: Copper and Cupronickel heat exchangers and tube bundles are not interchangeable. Units with suffix "C" must use copper replacement parts and units with suffix "X" must use Cupronickel replacement parts.

CALL OUT	DESCRIPTION	206A	266A	336A	406A
HM	**HEAT EXCHANGER - METAL (ASME-CERTIFIED, FOR COMMERCIAL USE)**				
1-HM	Heat Exchanger Assy. Copper ASME (Bronze)				
	Units manufactured from 12/2019	017983F	017984F	017985F	017986F
	Heat Exchanger Assy. Cupronickel ASME (Bronze)				
	Units manufactured from 12/2019	017987F	017988F	017989F	017990F
	**Option #2: Units manufactured from 12/2019 (Bronze)	100-10002250	100-10002251	100-10002252	100-10002253
2-HM	Inlet/Outlet Header ASME Complete (Bronze)				
	Units manufactured from 7/2020	018740F	018740F	018741F	018741F
	Inlet/Outlet Header ASME (Bronze)				
	Units manufactured from 7/2020 (Flow Switch Ready Header)	018291F	018291F	018291F	018291F
	Units manufactured from 7/2020 (Standard)	018739F	018739F	018739F	018739F
	Flange Gasket 2" Connections - prior to 12/2019	800080B	800080B	800080B	800080B
3-HM	Return Header ASME (Bronze)				
	Units manufactured from 7/2020	018738F	018738F	018738F	018738F
4-HM	Tube Bundle Copper ASME *				
	Units manufactured from 12/2019	017974F	017975F	017976F	017977F
	Tube Bundle Cupronickel ASME *				
	Units manufactured from 12/2019	017978F	017979F	017980F	017981F
5-HM	Baffle (1.060"-1.065" width)	010038F	005261F	010040F	010041F
	Baffle (0.85" width)	100-10001116	100-10001117	100-10001118	100-10001119
6-HM	Stud Bolt Kit				
	Units manufactured from 12/2019	017982F	017982F	017982F	017982F
7-HM	Header Gasket (9)	800014B	800014B	800014B	800014B
8-HM	Unitherm Governor	062234B	062234B	062234B	062234B
9-HM	U.G. Retainer Spring	013792F	013792F	013792F	013792F
18-HM	U.G. Plug (Brass)	013738F	013738F	013738F	013738F
10-HM	Bypass Valve	016194F	016194F	016194F	016194F
12-HM	Drain Valve (1/8" NPT)	013793F	013793F	013793F	013793F
13-HM	Sensor Well	003765F	003765F	003765F	003765F
14-HM	Well Retaining Clip	100-10000413	100-10000413	100-10000413	100-10000413
17-HM	Rear Drain Plug & Cover	005264F	005264F	005264F	005264F
19-HM	Adapter CPVC 2"	005393F	005393F	005393F	005393F
26-HM	Adapter - ProTek Shield (Includes 27-HM) from end of Q3 2020	018006F	018006F	018006F	018006F
27-HM	Nut - ProTek Shield Adapter - 2-Pcs from end of Q3 2020	018007F	018007F	018007F	018007F
28-HM	U.G./Bypass Assembly (Units manufactured from 12/2019)	018759F	018759F	018758F	018758F
29-HM	ProTek Shield Assembly from end of Q3 2020	018766F	018766F	018766F	018766F
30-HM	ProTek Shield Adapter Assembly - from end of Q3 2020	018006F	018006F	018006F	018006F
31-HM	Bypass O-Ring (Units manufactured from 12/2019)	016230F	016230F	016230F	016230F
J	**CONTROL BOX**	**206A**	**266A**	**336A**	**406A**
1-J	Transformer 120/240/24V	006736F	006736F	006736F	006736F
2-J	Rocker Switch	009493F	009493F	009493F	009493F
M	**MISCELLANEOUS COMPONENTS**	**206A**	**266A**	**336A**	**406A**
1-M	Pressure Switch 1.75 PSI	006737F	006737F	006737F	006737F
	Pressure Switch 11 PSI (Special-See Water Pressure Switch Adj.)	009133F	009133F	009133F	009133F
4-M	Thermal Fuse	005899F	005899F	005899F	005899F
5-M	PRV (75 PSI)	017957F	017957F	017957F	017957F
6-M	Deliming Kit (Not Shown)	052871F	052871F	052871F	052871F
	Wire/Harness IID	009490F	009490F	009490F	009490F
10-M	Control Bezel (Includes Switch Decal)				
	Units manufactured from 5/2011	013491F	013491F	013491F	013491F
11-M	Switch/Decal-Membrane				
	Units manufactured from 5/2011	013492F	013492F	013492F	013492F
12-M	Control Bezel Cover	009487F	009487F	009487F	009487F
13-M	Gasket Insulation (Swaybrace & Jacket Top)	010350F	010350F	010350F	010350F
14-M	Touch-up Paint (Not Shown)				
	Green	100-10000659	100-10000659	100-10000659	100-10000659
	Dark Gray	100-10000660	100-10000660	100-10000660	100-10000660
	Cool Dark Gray	100-10000534	100-10000534	100-10000534	100-10000534
	Warm Dark Gray	100-10000535	100-10000535	100-10000535	100-10000535
15-M	Tie Down Bracket (Optional)	011636	011636	011636	011636
18-M	Flow Switch	007142F	007142F	007142F	007142F
19-M	Flow Switch Paddle	010026F	010026F	010026F	010026F
20-M	T & P Gauge	014647F	014647F	014647F	014647F
21-M	2" CPVC Adapter (Outlet Plumbing)				
	NPT Connection	013795F	013795F	013795F	013795F
	Flanged Connection	015883F	015883F	015883F	015883F
22-M	2" CPVC Connector & Nut (2)	006723F	006723F	006723F	006723F
23-M	O-Ring (2)	006724F	006724F	006724F	006724F
17-M	PC Board Shield (Optional)	015557F	015557F	015557F	015557F
24-M	Gas Line Finish Flange	016160F	016160F	016160F	016160F

***WARNING**: The Hydraulic conditions or water chemistry that caused the tube bundle to fail have very likely also damaged the bypass valve and Unitherm Governor. Raypak recommends you replace the Unitherm Governor and inspect the bypass assembly. Failure to do so could cause premature failure of this replacement part.

****Option #2**: For Tube Bundle and Heat Exchanger kit assemblies that use the "5-HM" 0.85" width baffles.

CALL OUT	DESCRIPTION	206A	266A	336A	406A
P	**PILOT**				
2-P	Pilot Nat & Pro IID	002003F	002003F	002003F	002003F
4-P	Pilot Orifice Nat. IID .020	003903F	003903F	003903F	003903F
	Pilot Orifice Pro. IID .012	004308F	004308F	004308F	004308F
7-P	Pilot Mounting Bracket IID	100-10000419	100-10000419	100-10000419	100-10000419
10-P	Hi Tension Wire IID with Pilot Electrode	N/A	N/A	N/A	N/A
11-P	Pilot Shield	010351F	010351F	010351F	010351F
R	**REFRACTORY**	**206A**	**266A**	**336A**	**406A**
1-R	Refractory Common Lt & Rt	010088F	010088F	010088F	010088F
2-R	Refractory Uncommon (Front & Rear)	010089F	010090F	010091F	010092F
3-R	Refractory Retainer Kit	010387F	010388F	010389F	010390F
S	**SHEET METAL**	**206A**	**266A**	**336A**	**406A**
1-S	Jacket Top (Louvered)	010047F	010048F	010049F	010050F
2-S	Flue Collector (Units with Polymer Header)	010071F	010072F	010073F	010074F
	Flue Collector (Units with Metal ASME Header)	010075F	010076F	010077F	010078F
3-S	Door Assy				
	Raypak				
	Cool Dark & Warm Dark Gray	013859F	013860F	013861F	013862F
	Rheem				
	Cool Dark & Warm Dark Gray	013863F	013864F	013865F	013866F
14-S	Screw & Retainer	006744F	006744F	006744F	006744F
4-S	Access Panel Set (3 Pcs Units with Polymer Header)	010311F	010311F	010311F	010311F
	Access Panel Set - ASME				
	Access Panel Set (3 Pcs. for BR Header) - from 12/2019	017967F	017967F	017967F	017967F
5-S	Jacket Side Panel Right	010376F	010376F	010376F	010376F
6-S	Jacket Side Panel Left	010377F	010377F	010377F	010377F
7-S	Jacket Rear Panel (2 Pcs.)	010372F	010373F	010374F	010375F
8-S	Poolstat Cover/Lock Box	009505	009505	009505	009505
11-S	Up Front Control Panel				
	Cool Dark Gray	013887F	013888F	013889F	013890F
	Warm Dark Gray	013891F	013892F	013893F	013894F
12-S	High Limit Shield	010342F	010342F	010342F	010342F
13-S	Weather Shield	010325F	010326F	010327F	010328F
15-S	Base Riser (Canada only)	019444F	019444F	019444F	019444F
V	**VENTING**	**206A**	**266A**	**336A**	**406A**
1-V	Indoor Stack Kit (Includes inner adapter panel)	009838	009839	009840	009841
	Outdoor Stack Kit (Includes inner adapter panel)	009834	009835	009836	009837
2-V	Stack Adapter	010330F	010331F	010332F	010333F
4-V	Outer Stack Adapter	011461F	011462F	011463F	011464F
3-V	"Pagoda" Top				
	Cool Dark Gray	013883F	013884F	013885F	013886F
	Green	010334	010335	010336	010337
CONVERSION KITS*					
Gas Conversion					
Nat. to Pro. IID Pilot					
#57* (0-1999 ft altitude)		100-10006062	100-10006063	100-10006064	100-10006065
#58* (2000-2999 ft altitude)		100-10006066	100-10006067	100-10006068	100-10006069
#59* (3000-4999 ft altitude)		100-10006070	100-10006071	100-10006072	100-10006073
#60* (5000-6999 ft altitude)		100-10004699	100-10004700	100-10004701	100-10004702
#61* (7000-7999 ft altitude)		100-10006074	100-10006075	100-10006076	100-10006077
Pro. to Nat. IID Pilot		**	**	**	**

* Gas conversions are to be done only by a qualified agency.
** Conversion must be made with complete burner tray and gas valve (see item 1-B).

If you need information for an older model heater, go to the Raypak website's model number history: https://www.raypak.com/technical-resources/documents/ link; or contact your Raypak representative for assistance.

Find a Raypak representative for Commercial or Pool product: https://www.raypak.com/commercial-sales-rep/ or https://www.raypak.com/pool-heater-sales-rep/.

Revision 50 reflects the following changes:

Updated IPL: Item 4-B removed all kits for Propane Gas. Water pressure switch pressure changed from 1.75 to 2.0 psig. Removed kit 017996F from Item 2-HM. Updated 3-HP (Return Header) from "015095F" to "100-10008782" and15-HP (Drain Plug) kit number from "006721F" to "100-10008775". Added "Standard" to units manufactured from 07/2020. Added Nat to Pro conversion orifice information to the last page of IPL.