INSTALLATION & OPERATION MANUAL

X94 Professional Gas-Fired Pool & Spa Heater

Low NOx Model: SR-410

NOTICE

SCAN WITH QR EQUIPPED SMART DEVICE FOR ONLINE MANUAL.

⚠WARNING: If the information in these instructions are not followed exactly, a fire or explosion may result causing property damage, personal injury or death.

Do not store or use gasoline or other flammable vapors and liquids or other combustible materials in the vicinity of this or any other appliance. To do so may result in an explosion or fire.

WHAT TO DO IF YOU SMELL GAS:

- Do not try to light any appliance.
- Do not touch any electrical switch; do not use any phone in your building.
- Immediately call your gas supplier from a neighbor's phone. Follow the gas supplier's instructions.
- If you cannot reach your gas supplier, call the fire department.

Installation and service must be performed by a qualified installer, service agency or the gas supplier.

⚠AVERTISSEMENT: Assurez-vous de bien suivre les instructions données dans cette notice pour réduire au minimum le risqué d'incendie ou d'explosion ou pour éviter tout dommage matériel, toute blessure ou la mort.

Ne pas entreposer ni utilizer d'essence ou ni d'autres vapeurs ou liquids inflammables à proimité de cet appareil ou de tout autre appareil.

CE FAIRE SI VOUS SENTEZ UNE ODEUR DE GAS:

- Ne pas tenter d'allumer d'appareil.
- Ne touchez á aucun interrupteur; ne pas vous server des téléphones se trouvant dans la bâtiment.
- Appelez immédiatement votre fournisseur de gaz depuis un voisin. Suivre les instructions du fournisseur.
- Si vous ne pouvez rejoinder le fournisseur, appelez le service es incendies.

L'installation et l'entretien doivent être assurés par un installeur qualifié ou par le fournisseur de gaz.

This manual should be maintained in legible condition and kept adjacent to the heater or in a safe place for future reference.

Raypak® A Rheem® Company

Effective: 04-25-25
Replaces: 03-26-25
P/N: 241494 Rev. 12

Revision 12 reflects the following change:

In Section 3: Reference to kit# "015464F" was changed to "015950F". Item 3-P (Hi Tension Wire) in the IPL was "014126F" and changed to "100-10006138"; Item 1-V "015361" (SS Venting) has been removed from IPL, it was obsoleted.

TABLE OF CONTENTS

1. WARNINGS 4
Pay Attention to these Terms 4
General Safety 6

2. WATER CHEMISTRY 6
Automatic Chlorinators And Chemical Feeders 6

3. BEFORE INSTALLATION 7
Receiving Equipment 7
Ratings and Certifications 7
Ambient Temperature Rating 7
Elevation 7
Specifications And Dimensions 8

4. INSTALLATION 9
Installation Codes 9
Clearances 9
Indoor Heater Installation 10
Combustion And Ventilation Air 12
Direct Vent Ducted Combustion Air Systems 12
Venting 12
Support of Vent Stack 13
Vent Terminal Location 13
Venting Installation Tips 14
Condensate Management 14
Venting Configurations 14
Vertical Venting (Category IV) Installation 14
Horizontal Through Wall Venting (Category IV) 16
Direct Vent – Horizontal Through-the-Wall 17
Direct Vent – Vertical 18
Outdoor Installation 19
Gas Supply Connections 21
Supply Pressures 21
Gas Pressure Adjustment Locations 21
Pipe Sizing For Gas Connections 21
Heat Exchanger Pressure Drop Tables 22
Flow Rates 22
External Automatic Bypass Valve 22
External Auxiliary Bypass Valve 22
Auxiliary Bypass Valve Adjustment 22
Pressure Relief Valve Piping 22
Electrical Wiring 23
Transformer Wiring 23
Plumbing—Water Connections 24
Loose Plumbing Parts Setup 24
Recommended Plumbing Setups 25

5. WIRING DIAGRAM 27

6. CONTROLS 28
General Control Locations 28
Control Adjustments 29
Control Panel Removal 29
Thermostat Operation - Ignition Control Board 29
Installer Setup Mode 30
Status And Diagnostics 32
Remote Control Installation And Operation 34
Remote Operation 34
Activating The Remote 34
Remote Control Wiring 35
2-Wire Remote Control (On-Off) 35
3-Wire Remote Control Using Three-Position Switch (Pool-Off-Spa, or Low-Off-High) 35
Time Clock/Fireman's Switch 36
High Limits 36
Flow Switch 36
Blocked Vent Switch 36
Adjusting Valve Manifold Pressure 36
Visual Inspection 37
Electrical 37
Orifice Removal 37
Combustion Settings 37
Igniter Removal 37

7. OWNER'S OPERATING INSTRUCTIONS 38
Start-Up Procedures 38

8. MAINTENANCE AND CARE 39
Care Procedures 39
Lighting and Shutdown 40
Chlorination and Water Chemistry 41
Cold Weather Operation 41
Winterizing the Pool and Spa Heater 41

9. TROUBLESHOOTING 42
Mechanical 42
Control Logic - Flow Chart (Pool & Spa Modes) 43

10. ILLUSTRATED PARTS LIST 44

11. IMPORTANT INSTRUCTIONS FOR THE COMMONWEALTH OF MASSACHUSETTS 48

12. INSTALLER SETUP RECORD 49

13. QR CODE 50

THIS INSTALLATION MANUAL MAY NOT BE THE LATEST REVISION PRINTED AT THE TIME OF PRODUCT SHIPMENT. VISIT THE RAYPAK WEBSITE TO VERIFY THE MANUAL DELIVERED WITH YOUR RAYPAK UNIT IS THE MOST UP-TO-DATE VERSION.

1. WARNINGS

Pay Attention to these Terms

⚠ DANGER	Indicates the presence of immediate hazards which will cause severe personal injury, death or substantial property damage if ignored.
⚠ WARNING	Indicates the presence of hazards or unsafe practices which could cause severe personal injury, death or substantial property damage if ignored.
⚠ CAUTION	Indicates the presence of hazards or unsafe practices which could cause minor personal injury or product or property damage if ignored.
CAUTION	CAUTION used without the warning alert symbol indicates a potentially hazardous condition which could cause minor personal injury or product or property damage if ignored.
NOTE	Indicates special instructions on installation, operation, or maintenance which are important but not related to personal injury hazards.

⚠ DANGER: Failure to properly vent the heater to the outdoors as outlined in the Venting section of this manual can result in unsafe operation of the heater. To avoid the risk of fire, explosion, or asphyxiation from carbon monoxide, never operate this heater unless it is properly vented and has an adequate air supply for proper operation. Be sure to inspect the vent system for proper installation at initial start-up; and at least annually thereafter. Refer to the Maintenance section of this manual for more information regarding vent system inspections.

⚠ DANGER: Make sure the gas on which the heater will operate is the same type as that specified on the heater rating plate.

⚠ DANGER: When servicing or replacing components that are in direct contact with the water, be certain that:

- **There is no pressure in the heater. (Pull the release on the relief valve. Do not depend on the pressure gauge reading).**
- **The heater water is not hot.**
- **The electrical power is off.**

⚠ WARNING: All venting types must be of the same material or product throughout the entire exhaust installation to ensure proper securing and sealing.

⚠ WARNING: Altering any Raypak pressure vessel by installing replacement heat exchangers, tube bundle headers, or any ASME parts not manufactured and/or approved by Raypak will instantly void the ASME and/or CSA ratings of the vessel and any Raypak warranty on the vessel. Altering the ASME and/or CSA ratings of the vessel also violates national, state, and local approval codes.

⚠ WARNING: This product must be installed by a licensed plumber or gas fitter when installed within the Commonwealth of Massachusetts.

⚠ WARNING: Both natural gas and propane have an odorant added to aid in detecting a gas leak. Some people may not physically be able to smell or recognize this odorant. If you are unsure or unfamiliar with the smell of natural gas or propane, ask your local gas supplier. Other conditions, such as "odorant fade," which causes the odorant to diminish in intensity, can also hide, camouflage, or otherwise make detecting a gas leak by smell more difficult.

⚠ WARNING: UL-recognized fuel gas detectors are recommended in all enclosed propane and natural gas applications wherein there is a potential for an explosive mixture of fuel gas to accumulate and their installation should be in accordance with the detector manufacturer's recommendations and/or local laws, rules, regulations, or customs.

⚠ WARNING: Do not install within 3 feet of a heat pump or an outdoor condensing unit. Strong air intake from this type of equipment can disturb the combustion process and cause damage or personal injury.

⚠ WARNING: Do not use this heater if any part has been under water. Immediately call a qualified service technician to inspect the heater and to replace any part of the control system and any gas control which has been under water.

⚠ AVERTISSEMENT: N'utilisez pas cet appareil s'il a été plongé dans l'eau, même partiellement. Faites inspecter l'appareil par un technicien qualifié et remplacez toute partie du système de contrôle et toute commande qui ont été plongés dans l'eau.

⚠ WARNING - CALIFORNIA PROPOSITION 65: This product contains chemicals known to the State of California to cause cancer, birth defects or other reproductive harm.

⚠WARNING: According to the Standard of Safety UL 4200A, which applies to consumer products containing button batteries or coin cell batteries, it is important to adhere to the following safety statements:

- **Remove and immediately recycle or dispose of used batteries according to local regulations and keep away from children. Do NOT dispose of batteries in household trash or incinerate.**
- **Even used batteries may cause severe injury or death.**
- **Call a local poison control center for treatment information.**
- **Compatible battery type: CR2032.**
- **Nominal battery voltage: 3V.**
- **Non-rechargeable batteries are not to be recharged.**
- **Do not force discharge, recharge, disassemble, heat above (manufacturer's specified temperature rating) or incinerate. Doing so may result in injury due to venting, leakage or explosion resulting in chemical burns.**
- **Ensure the batteries are installed correctly according to polarity (+ and -).**
- **Do not mix old and new batteries, different brands or types of batteries, such as alkaline, carbon-zinc, or rechargeable batteries.**
- **Remove and immediately recycle or dispose of batteries from equipment not used for an extended period of time according to local regulations.**
- **Always completely secure the battery compartment. If the battery compartment does not close securely, stop using the product, remove the batteries, and keep them away from children.**

⚠WARNING

- **INGESTION HAZARD**: This product contains a button cell or coin battery.
- **DEATH** or serious injury can occur if ingested.
- A swallowed button cell or coin battery can cause **Internal Chemical Burns** in as little as **2 hours**.
- **KEEP** new and used batteries **OUT OF REACH of CHILDREN**
- **Seek immediate medical attention** if a battery is suspected to be swallowed or inserted inside any part of the body.

su4904

General Safety

Elevated water temperature can be hazardous. The U.S. Consumer Product Safety Commission has these guidelines:

1. Spa water temperatures should never exceed 104°F (40°C). A temperature of 100°F (38°C) is considered safe for a healthy adult. Special caution is suggested for young children.
2. Drinking of alcoholic beverages before or during spa or hot tub use can cause drowsiness which could lead to unconsciousness and subsequently result in drowning.
3. Pregnant Women Beware! Soaking in water over 102°F (39°C) can cause fetal damage during the first three months of pregnancy resulting in the birth of a brain-damaged or deformed child. Pregnant women should stick to the 100°F (38°C) maximum rule.
4. Before entering the spa or hot tub, users should check the water temperature with an accurate thermometer; spa or hot tub thermostats may err in regulating water temperatures by as much as 4°F (2.2°C).
5. Persons with a medical history of heart disease, circulatory problems, diabetes, or blood pressure problems should obtain a physician's advice before using spas or hot tubs.
6. Persons taking medications which induce drowsiness, such as tranquilizers, antihistamines, or anticoagulants, should not use spas or hot tubs.

2. WATER CHEMISTRY

NOTE: Damage due to poor water chemistry is not a warrantable defect.

Chemical imbalance can cause severe damage to your heater and associated equipment. Maintain your water chemistry according to **Table A**. If the mineral content and dissolved solids in the water become too high, scale forms inside the heat exchanger tubes, reducing heater efficiency and damaging the heater. If the pH drops below 7.2, this will cause corrosion of the heat exchanger and severely damage the heater. **Heat exchanger damage resulting from chemical imbalance is not covered by the warranty.**

For your health and the protection of your pool equipment, it is essential that your water be chemically balanced. The following levels must be used as a guide for balanced water.

CAUTION: Free chlorine must not exceed 5 ppm which can damage the heater and is not covered under warranty.

- Occasional chemical shock dosing of the pool or spa water should not damage the heater providing the water is balanced.
- Automatic chemical dosing devices and salt chlorinators are usually more efficient in heated water, unless controlled, they can lead to excessive chlorine level which can damage your heater.
- Check valve should be installed between the heater outlet and a chlorinator or other chemical dosing device.
- Further advice should be obtained from your pool or spa builder, accredited pool shop, or chemical supplier for the correct levels for your water.

Automatic Chlorinators and Chemical Feeders

All chemicals must be introduced and completely diluted into the pool or spa water before being circulated through the heater. Do not place sanitizing chemicals in the skimmer. High chemical concentrations will result when the pump is not running (e.g. overnight).

Chlorinators must feed downstream of the heater and have an anti-siphoning device to prevent chemical back-up into the heater when the pump is shut off. A check valve should be installed between the heater outlet and the chlorinator.

See plumbing diagrams found in **Figure 25** thru **Figure 28**.

NOTE: High chemical concentrates from feeders and chlorinators that are out of adjustment will cause rapid corrosion of the heat exchanger. Such damage is not covered under the warranty.

Recommended Level(s)	Fiberglass Pools	Fiberglass Spas	Other Pool and Spa Types
Water Temperature	68-88°F (20-31°C)	89-104°F (31-40°C)	68-104°F (20-40°C)
pH	7.3-7.4	7.3-7.4	7.6-7.8
Total Alkalinity (ppm)	120-150	120-150	80-120
Calcium Hardness (ppm)	200-300	150-200	200-400
Salt (ppm)	4500 Maximum	4500 Maximum	4500 Maximum
Free Chlorine (ppm)*	2-3	2-3	2-3
Total Dissolved Solids (ppm)	3000 Maximum**	3000 Maximum**	3000 Maximum**

*Free Chlorine **MUST NOT EXCEED 5 ppm!**
**In saltwater chlorinated pools, the total TDS can be as high as 6000 ppm.

Table A. Pool Water Chemistry

3. BEFORE INSTALLATION

Receiving Equipment

The manufacturer recommends that this manual be reviewed thoroughly before installing your pool/spa heater. If there are any questions that this manual does not answer, please contact the factory or your local representative.

On receipt of your equipment it is suggested that you visually check for external damage to the carton. If the carton is damaged, a note should be made on the Bill of Lading when signing for the equipment. Remove the heater from the carton. If it is damaged, report the damage to the carrier immediately. Save the carton.

These items are shipped inside a box in the carton with the heater:

STANDARD UNIT COMPONENTS:

1. Bypass assembly P/N 015459F
2. Bonding lug with mounting screw
3. 4" Intake air adapter P/N 015527F (not shown)
4. PVC/Polypropylene/Stainless Steel vent adapter P/N 015508F
5. (2) 2" CPVC Plugs (not shown)
6. (4) Mounting screws and (4) washers
7. (2) Bird screens (not shown)
8. 4" Sch 40 PVC Tee and
   5" (127 mm) L x 4” diameter Sch 40
   PVC vent pipe P/N 015451
9. (2) 2" CPVC Swivel Unions P/N 015950F

Be sure that you receive the number of packages indicated on the Bill of Lading.

When ordering parts, you must specify the model and serial numbers of the heater. See **Figure 2** for location of serial number. When ordering under warranty conditions, you must also specify date of installation.

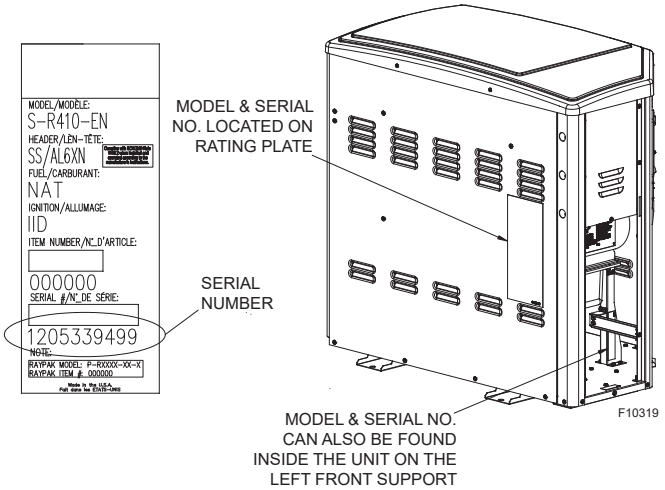

Figure 2. Serial No. Location

Ratings and Certifications

These heaters are design-certified and tested under the latest requirements of the ANSI Z21.56 / CSA 4.7 Standard for Gas-Fired Pool Heaters. All heaters can be used either indoor or outdoors. The heat exchanger bears the ASME H-stamp and is National Board registered.

Ambient Temperature Rating

- Electronics and controls -32°F to +175°F (-35.5°C to +79.5°C)
- Condensate drains and trap* +32ºF to 175ºF (0°C to 79°C)

*The heater must be in a non-freezing environment to operate properly. Frozen condensate may damage components. Winterize the heater prior to prolonged exposure to freezing temperatures.

Elevation

Rated inputs are suitable for up to 4,500’ (1,371 m) elevation. At elevations above 4500 feet (1,371 m) the input will be reduced by approximately 2.5% for each 1,000’ (304.8 m) above sea level as high elevation reduces gas and air density. No hardware changes are required to adjust the unit for operation from 0-8000 ft. elevation (0-2438 m).

Adjust as required to maintain proper combustion and emissions.

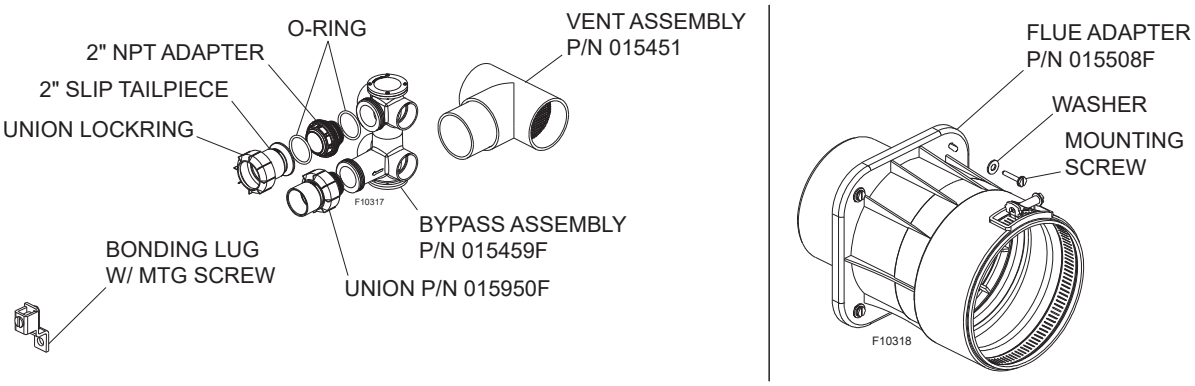

Figure 1. Standard Unit Components

Specifications and Dimensions

Electrical Requirements:

120V/1ph/60Hz/5A

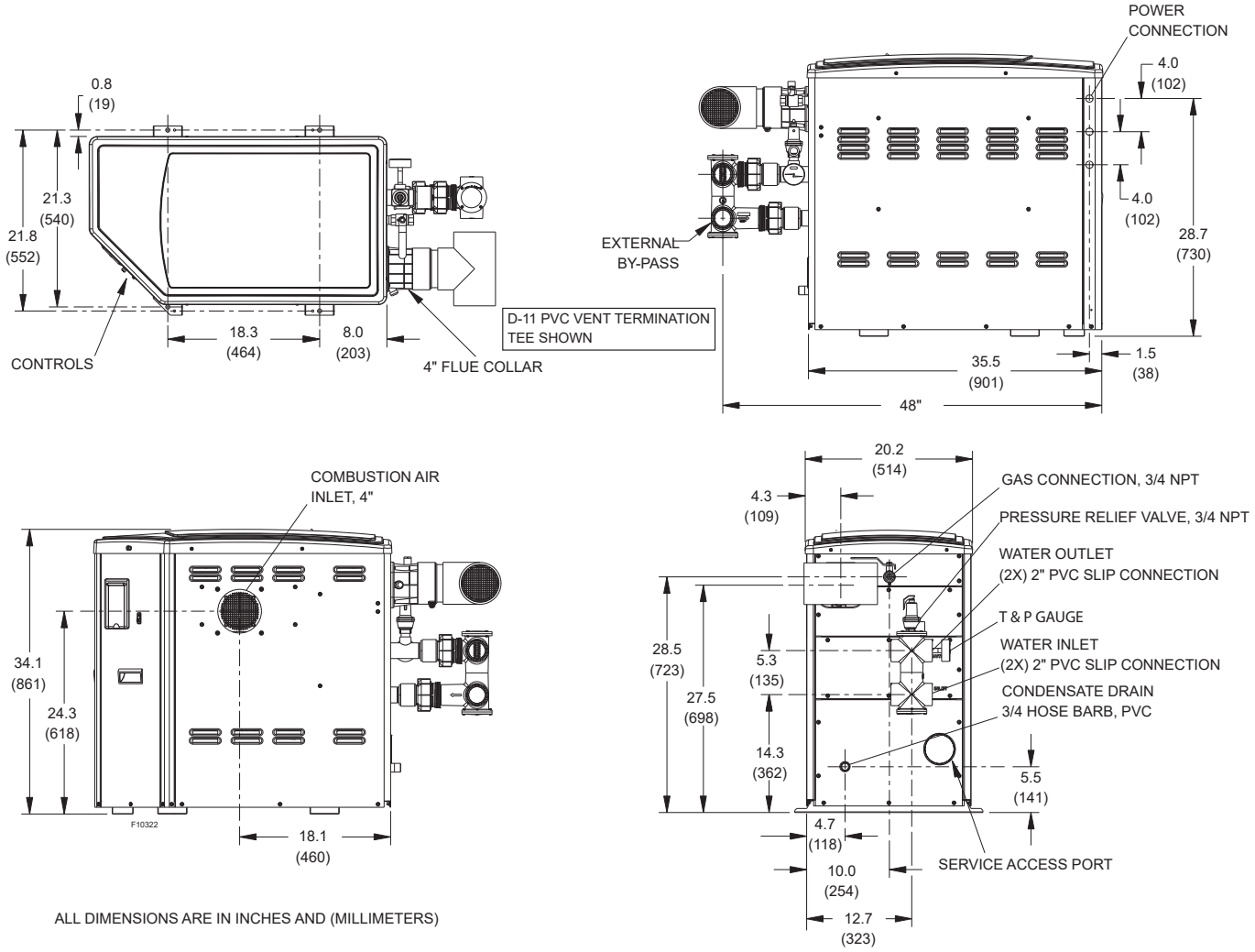

Figure 3. Specifications and Dimensions

MBTUH Input (kWh)	GPM (LPM)		Approx. Shipping Weight Lbs. (Kg)
	Minimum Flow	Maximum Flow	
399.0 (116)	40 (151)	125 (473)	300 (136)

Table B. Specifications and Dimensions

Notes:

1. The model number prefix indicates: (S=Stainless Steel Heat Exchanger), (R=Raypak) Model number suffix indicates: pilot type (E = Digital) and fuel type (P = Propane, N = Natural Gas). Example: Model number SR-410-EN indicates a unit with digital (IID) ignition using natural gas with a stainless steel heat exchanger.
2. Heaters are suitable for operation at full rated input on natural gas and propane up to 4,500 ft. (1,372 m). For elevations over 4,500' (1,372 m), consult the factory.
3. Flue gases must be properly vented with Cat IV vent material. Inlet air can be ducted with 4" metal or PVC pipe. See the venting section starting on page 12 of this manual for complete venting details.

4. INSTALLATION

CALIFORNIA PROPOSITION 65 WARNING: This product contains chemicals known to the State of California to cause cancer, birth defects or other reproductive harm.

⚠WARNING: This unit contains refractory ceramic fiber (RCF) insulation in the combustion chamber. RCF, as manufactured, does not contain respirable crystalline silica. However, following sustained exposure to very high temperatures (>2192°F [1200°C]), the RCF can transform into crystalline silica (cristabolite). The International Agency for Research on Cancer (IARC) has classified the inhalation of crystalline silica (cristabolite) as carcinogenic to humans. When removing the burner or heat exchanger, take precautions to avoid creating airborne dust and avoid inhaling airborne fibers. When cleaning spills, use wet sweeping or High Efficiency Particulate Air (HEPA) filtered vacuum to minimize airborne dust. Use feasible engineering controls such as local exhaust ventilation or dust collecting systems to minimize airborne dust. Wear appropriate personal protective equipment including gloves, safety glasses with side shields, and appropriate NIOSH certified respiratory protection, to avoid inhalation of airborne dust and airborne fiber particles.

⚠WARNING: Improper installation, adjustment, alteration, service or maintenance may damage the equipment, creating a hazard resulting in asphyxiation, explosion or fire. Such damage is not covered under warranty.

NOTE: The heater should not be located in an area where possible water leakage will result in damage to the area adjacent to the heater or to the structure. When such locations cannot be avoided, it is recommended that a suitable drain pan, with adequate drainage, be installed under the heater. The pan must not restrict combustion air flow.

IMPORTANT NOTICE:

These instructions are intended only for the use by qualified personnel, specifically trained and experienced in the installation of this type of heating equipment and related system components. Installation and service personnel may be required by some states to be licensed. If your state is such, be sure your contractor bears the appropriate license. Persons not qualified shall not attempt to repair this equipment according to these instructions.

Installation Codes

Installation must be in accordance with local codes, or, in the absence of local codes, with the latest edition of the National Fuel Gas Code, ANSI Z223.1/NFPA54 and National Electrical Code, ANSI/NFPA 70, and for Canada, the latest edition of CAN/CSA-B149 Installation Codes, and Canadian Electrical Code, CSA C22.1 Part 1 and Part 2.

Clearances

All Heaters

For indoor and outdoor clearances from combustible surfaces see **Table C** below.

Location	Indoor Installation
Top	24" (609.6 mm)
Front	Alcove (Open)
Vent	1" (25.4 mm)
Floor *	0" (0 mm)
Back	1" (25.4 mm)
Right-Side	
Left-Side	

Location	Outdoor Installation
Top	Unobstructed (Outdoor Stack)
Floor	0" (0 mm)
Back	12" (304.8 mm)
Right-Side	1" (25.4 mm)
Left-Side	

* Do not install on carpeting

Table C. Minimum Clearances from Combustible Surfaces

When installed according to the listed minimum clearances from combustible construction, the pool heater can still be serviced without removing permanent construction around the heater.

However, for ease of servicing, Raypak recommends a clearance of at least 24" (609.6 mm) in the front and back. This will enable the heater to be serviced in its installed location, without movement or removal of the heater.

NOTE: The heater must be installed in a manner that will enable the heater to be serviced without removing any structure around the heater.

FLOORING: This heater can be installed on combustible flooring.

The controls are on the angled face, which must be accessible. Installing the unit in such a way that the controls are not accessible is not recommended and not supported.

Description	Location	Distance in. (mm)
a. 3-1/2" (89 mm) thick masonry walls without ventilated air space	Back	9 (229)
	Right	9 (229)
	Left	9 (229)
	Vent	5 (127)
	Indoor Top	39 (991)
	Outdoor Top	Unobstructed

b. 1/2" (13 mm) insulation board over 1" (25 mm) glass fiber or mineral wool batts	Back	6 (152)
	Right	6 (152)
	Left	6 (152)
	Vent	3 (76)
	Indoor Top	30 (762)
	Outdoor Top	Unobstructed
c. 0.024 sheet metal over 1" (25 mm) glass fiber or mineral wool batts reinforced with wire on rear face with ventilated air space	Back	4 (102)
	Right	4 (102)
	Left	4 (102)
	Vent	3 (76)
	Indoor Top	24 (610)
	Outdoor Top	Unobstructed
d. 3-1/2" (89 mm) thick masonry wall with ventilated air space	Back	6 (152)
	Right	6 (152)
	Left	6 (152)
	Vent	6 (152)
	Indoor Top	39 (991)
	Outdoor Top	Unobstructed
e. 0.024 sheet metal with ventilated air space	Back	4 (102)
	Right	4 (102)
	Left	4 (102)
	Vent	2 (51)
	Indoor Top	24 (610)
	Outdoor Top	Unobstructed
f. 1/2" (13 mm) thick insulation board with ventilated air space	Back	4 (102)
	Right	4 (102)
	Left	4 (102)
	Vent	3 (76)
	Indoor Top	24 (610)
	Outdoor Top	Unobstructed
g. 0.024 sheet metal with ventilated air space over 0.024 sheet metal with ventilated air space.	Back	4 (102)
	Right	4 (102)
	Left	4 (102)
	Vent	3 (76)
	Indoor Top	24 (610)
	Outdoor Top	Unobstructed
h. 1" (25 mm) glass fiber or mineral wool batts sandwiched between two sheets 0.024 sheet metal with ventilated air space	Back	4 (102)
	Right	4 (102)
	Left	4 (102)
	Vent	3 (76)
	Indoor Top	24 (610)
	Outdoor Top	Unobstructed

Derived from National Fuel Gas Code, Table 10.2.3

Table D. Reduction of Clearances to Protected Surfaces

Heaters must not be installed under an overhang of less than five 5' (1.52 m) from the top of the heater, and the vent terminal must be a minimum of 5' (1.52 m) from any overhang. See page 13 for vent terminal location requirements. Three sides must be open in the area under the overhang. Roof water drainage must be diverted away from the heaters installed under overhangs with the use of gutters

For U.S. installations, the point from where the flue products exit the heater must be a minimum of 4' (1.22 m) below, 4' (1.22 m) horizontally from, or 1' (0.3 m) above any door, window or gravity inlet into any building. The vent discharge of the heater shall be at least 3' (0.91 m) above any forced air inlet, or intake ducts located within 10' (3.05 m) horizontally.

For installations in Canada, pool heaters shall not be installed with the top of the vent assembly within 10' (3 m) below, or to either side, of any opening into the building. Refer to the latest revisions of CAN/CSA-B149.

For installations in Florida and Texas that must comply with the Florida or Texas Building Code, follow the directions in **Figure 14** for the installation of hurricane tie-down method for all models.

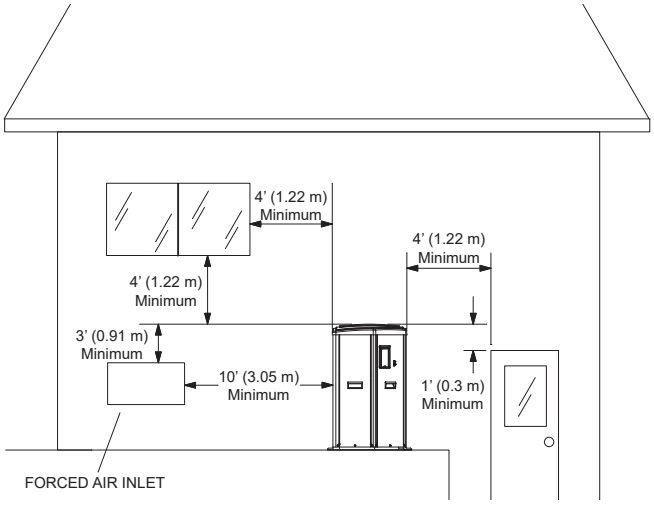

Figure 4. Clearances

Outdoor Heater Installation

X94 Professional heaters are design-certified for outdoor installation, when equipped with the approved vent terminals designated for outdoor use. The heaters are designed for outdoor operation in non-freezing conditions only. Freezing conditions may cause condensate to freeze in the condensate drain line and trap causing the unit to shut down from a blocked condensate drain. Additionally, components of the condensate management system may be damaged by the ice formation. Units installed in freezing climates for seasonal use must be winterized to avoid freeze damage to the heater. See Winterizing Instructions on page 41.

⚠WARNING: The heater shall not be located in an area where water sprinklers, or other devices, may cause water to spray through the cabinet louvers and into the heater. This could cause internal rusting or damage electrical components; such damage is not covered under warranty.

⚠WARNING: Do not install within 3' (0.91 m) of a heat pump or an outdoor condensing unit. Strong air intake from this type of equipment can disturb the combustion process and cause damage or personal injury.

Indoor Heater Installation

The heater must always be vented to the outside. See the Venting section (beginning on page 13) for details. Minimum allowable space is shown on the nameplate. Also, see **Figure 3** and **Table B**.

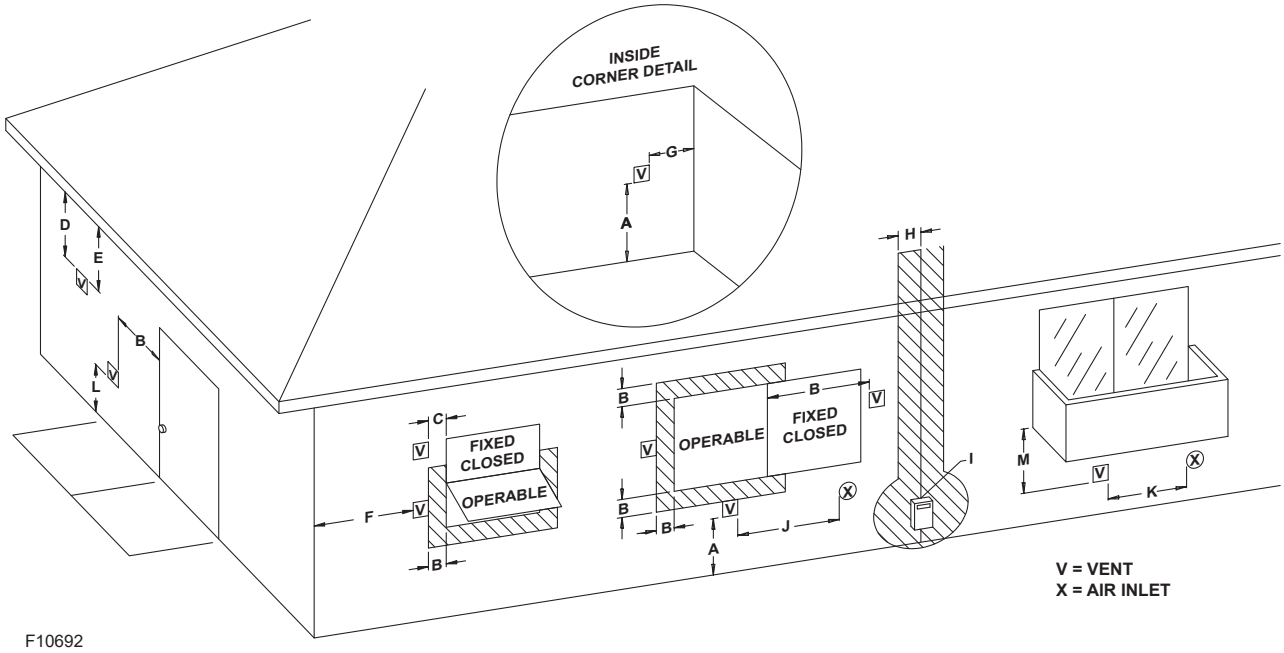

Figure 5. Minimum Clearances from Vent/Air Inlet Terminations – Indoor and Outdoor Installations

		U.S. Installations[1]	Canadian Installations[2]
A	Clearance above grade, veranda, porch, deck, or balcony	1' (30 cm)	1' (30 cm)
B	Clearance to window or door that may be opened	4' (1.2 m) below or to side of opening, minimum 1 ft. (30 cm) above opening	10' (305 cm)
C	Clearance to permanently closed window	*	*
D	Vertical clearance to ventilated soffit located above the terminal within a horizontal distance of 2' (61 cm) from the centerline of the terminal	5' (1.5 m)	*
E	Clearance to unventilated soffit	*	*
F	Clearance to outside corner	*	*
G	Clearance to inside corner	6' (1.83 m)	*
H	Clearance to each side of center line extended above meter/regulator assembly	*	3' (91 cm) within a height 15' (457 cm) above the meter/ regulator assembly
I	Clearance to service regulator vent outlet	*	6' (183 cm)
J	Clearance to non-mechanical air supply inlet to building or the combustion air inlet to any other appliance	4' (1.2 m) below or to side of opening; 1' (30 cm) above opening	3' (91 cm)
K		3' (91 cm) above if within 10' (3 m) horizontally	6' (183 cm)
L	Clearance above paved sidewalk or paved driveway located on public property	Slip hazard due to frozen condensate	Slip hazard due to frozen condensate [4]
M	Clearance under veranda, porch, deck or balcony	*	12" (30 cm) [3]

1 In accordance with the current ANSI Z223.1/NFPA 54 National Fuel Gas Code.

2 In accordance with the current CAN/CSA-B149 Installation Codes.

3 Permitted only if veranda, porch, deck, or balcony is fully open on a minimum of two sides beneath the floor and top of terminal, and underside of veranda, porch, deck or balcony is greater than 1' (30 cm).

4 Vent terminal shall not terminate directly above sidewalk or paved driveway located between 2 single family dwellings that serves both dwellings

* Clearances in accordance with local installation codes and the requirements of the gas supplier.

Table E. Vent/Air Inlet Termination Clearances

Combustion and Ventilation Air

(Indoor Units Only)

The heater must have both combustion and ventilation air. Minimum requirements for net free air supply openings are one opening that is 12" (305 mm) from the ceiling for ventilation, and one opening that is 12" (305 mm) from the floor for combustion air as outlined in the latest edition of the National Fuel Gas Code, ANSI Z223.1(Canada-CAN/CSA-B149) and any local codes that may have jurisdiction.

All Air from Inside the Building:

Each opening shall have a minimum net free area as noted:

Sq. in. (m^2)
399 (0.26 m^2)

Table F. Opening Minimum Net Free Requirements - Indoor Air

All Air from Outdoors:

When air is supplied directly from outside the building, each opening shall have a minimum net free area as noted:

Unrestricted Opening sq. in. (m^2)	Typical Screened or Louvered Opening sq. in. (m^2)	Typical Screened and Louvered Opening sq. in. (m^2)
100 (0.06)	150 (0.1)	200 (0.13)

Table G. Opening Minimum Net Free Requirements - Outdoor Air

CAUTION: Combustion air must not be contaminated by corrosive chemical fumes which can damage the heater. Such damage will not be covered by the warranty

Direct Vent and Ducted Combustion Air Systems

If outside air is drawn through the intake pipe directly to the unit for combustion:

1. Install combustion air direct vent as instructed by "Direct Vent – Horizontal Through-the-Wall" on page 17 or "Direct Vent – Vertical" on page 18 of this manual.
2. Provide adequate ventilation of the space occupied by the heater(s) by an opening(s) for ventilation air at the highest practical point communicating with the outdoors.
   a. In the US, the total cross-sectional area shall be at least 1 in² of free area per 20,000 BTUH (111 mm² per kW) of total input rating of all equipment in the room when the opening is communicating directly with the outdoors or through vertical duct(s). The total cross-sectional area shall be at least 1 in² of free area per 10,000 BTUH (222 mm² per kW) of total input rating of all equipment in the room when the opening is communicating with the outdoors through horizontal duct(s).
   b. In Canada, there shall be permanent air supply opening(s) having a total cross-sectional area of not less than 1 in.² of free area per 30,000 BTUH (70 mm² per kW) of the total rated input. The location of the opening(s) shall not interfere with the intended purpose of the opening(s) for the ventilation air.
3. In cold climates, and to mitigate potential freeze-up, Raypak highly recommends the installation of a motorized sealed damper (by others) to prevent the circulation of cold air through the heater during the non-operating hours.

Venting

CAUTION: Proper installation of flue venting is critical for the safe and efficient operation of the heater.

General

Appliance Categories

Heaters are divided into four categories based on the pressure produced in the exhaust and the likelihood of condensate production in the vent.

Category I – A heater which operates with a non-positive vent static pressure and with a vent gas temperature that avoids excessive condensate production in the vent.

Category II – A heater which operates with a non-positive vent static pressure and with a vent gas temperature that may cause excessive condensate production in the vent.

Category III – A heater which operates with a positive vent pressure and with a vent gas temperature that avoids excessive condensate production in the vent.

Category IV – A heater which operates with a positive vent pressure and with a vent gas temperature that may cause excessive condensate production in the vent.

See **Table H** for appliance category requirements.

NOTE: For additional information on appliance categorization, see appropriate ANSI Z21 Standard and the NFGC (U.S.), or B149 (Canada), or applicable provisions of local building codes.

⚠WARNING: Contact the manufacturer of the vent material if there is any question about the appliance categorization and suitability of a vent material for application on a Category IV vent system. Using improper venting materials can result in personal injury, death or property damage.

Combustion Air Supply	Exhaust Configuration	Heater Venting Category	Certified Vent Materials (Must be UL 1738 or ULC S636)	Combustion Air Inlet Materials
From Inside Building	Vertical Venting	IV	Metallic Vent (such as AL29-4C), Duravent PolyPro, ASTM D1785 Sch 40 PVC, ASTM F441 Sch 40 CPVC	
	Horizontal Through-the-Wall Venting	IV		
From Outside Building (Direct Vent or Ducted Combustion Air)	Vertical Venting with Ducted Combustion Air	IV		Galvanized Steel PVC ABS CPVC
	Vertical Direct Vent	IV		
	Horizontal Direct Vent	IV		

Table H. Venting Category Requirements

Support of Vent Stack

The weight of the vent stack or chimney must not rest on the heater vent connection. Support must be provided in compliance with applicable codes. The vent should also be installed to maintain proper clearances from combustible materials. Use insulated vent pipe spacers where the vent passes through combustible roofs and walls.

Vent Terminal Location

NOTE: During winter months check the vent cap and make sure no blockage occurs from build-up of snow or ice.

1. Condensate can freeze on the vent cap. Frozen condensate on the vent cap can result in a blocked flue condition.
2. Give special attention to the location of the vent termination to avoid possibility of property damage or personal injury.
3. Gases may form a white vapor plume in winter. The plume could obstruct a window view if the termination is installed near windows.
4. Prevailing winds, in combination with below-freezing temperatures, can cause freezing of condensate and water/ice build-up on buildings, plants or roofs.
5. The bottom of the vent terminal and the air intake shall be located at least 12 in. (305 mm) above grade, including normal snow line.
6. Un-insulated single-wall metal vent pipe shall not be used outdoors in cold climates for venting gas-fired equipment.
7. Through-the-wall vents for Category II and IV appliances and non-categorized condensing appliances shall not terminate over public walkways or over an area where condensate or vapor could create a nuisance or hazard or could be detrimental to the operation of regulators, relief valves, or other equipment. Where local experience indicates that condensate is a problem with Category I and III appliances, this provision shall also apply.
8. Locate and guard vent termination to prevent accidental contact by people or pets.
9. DO NOT terminate vent in window well, stairwell, alcove, courtyard or other recessed area.
10. Terminate a minimum of 1 ft. (0.3 m) above any door, window, or gravity air intake. Condensate can freeze, causing ice formations.
11. Locate or guard vent to prevent condensate from damaging exterior finishes. Use a rust-resistant sheet metal backing plate against brick or masonry surfaces.
12. DO NOT extend exposed vent pipe outside of building beyond the minimum distance required for the vent termination. Condensate could freeze and block the vent pipe.

U.S. Installations

Refer to the latest edition of the National Fuel Gas Code.

Vent termination requirements are as follows:

1. Vent must terminate at least 4 ft. (1.2 m) below, 4 ft. (1.2 m) horizontally from or 1 ft. (0.3 m) above any door, window or gravity air inlet to the building.
2. The vent must not be less than 7 ft. (2.1 m) above grade when located adjacent to public walkways.
3. Terminate vent at least 3 ft. (0.9 m) above any forced air inlet located within 10 ft. (3.0 m).
4. Vent must terminate at least 4 ft. (1.2 m) horizontally, and in no case above or below unless 4 ft. (1.2 m) horizontal distance is maintained, from electric meters, gas meters, regulators, and relief equipment.
5. Terminate vent at least 6 ft. (1.8 m) away from adjacent walls.
6. DO NOT terminate vent closer than 5 ft. (1.5 m) below roof overhang.
7. The vent terminal requires a 12 in. (305 mm) vent terminal clearance from the wall.
8. Terminate vent at least 1 ft. (0.3 m) above grade, including normal snow line.

9. Multiple direct vent installations require a 4 ft. (1.2 m) clearance between the ends of vent caps located on the same horizontal plane.

⚠WARNING: The Commonwealth of Massachusetts requires that sidewall vented heaters, installed in every dwelling, building or structure used in whole or in part for residential purposes, be installed using special provisions as outlined on page 48 of this manual.

Canadian Installations

Refer to latest edition of the B149 Installation code.

A vent shall not terminate:

1. Directly above a paved sidewalk or driveway which is located between two single-family dwellings and serves both dwellings.
2. Less than 7 ft. (2.13 m) above a paved sidewalk or paved driveway located on public property.
3. Within 6 ft. (1.8 m) of a mechanical air supply inlet to any building.
4. Above a meter/regulator assembly within 3 ft. (915 mm) horizontally of the vertical centerline of the regulator.
5. Within 3 ft. (0.9 m) of any gas service regulator vent outlet.
6. Less than 1 ft. (305 mm) above grade level.
7. Within 3 ft. (915 mm) of a window or door which can be opened in any building, any non-mechanical air supply inlet to any building or the combustion air inlet of any other appliance.
8. Underneath a veranda, porch or deck, unless the veranda, porch or deck is fully open on a mini-mum of two sides beneath the floor, and the distance between the top of the vent termination and the underside of the veranda, porch or deck

Venting Installation Tips

Support piping:

- horizontal runs—at least every 5' (1.52 m)
- vertical runs—use braces
- under or near elbows

⚠WARNING: Examine the venting system at least once a year. Check all joints and vent pipe connections for tightness, corrosion or deterioration.

Condensate Management

The condensate must be drained properly to protect the appliance and drainage system. The condensate from the boiler is acidic. Its pH is between 3.2 and 4.5. Raypak recommends treating the condensate with a Condensate Treatment Kit (sales order option Z-12). The treatment kit is connected to the drain system and contains magnesium oxide chips to raise the pH level of the condensate. The kit may be added to avoid long-term damage to the drainage system and to meet local code requirements. The pH of the effluent entering a sanitary drain must be 5.0 or higher.

Vent pipe condensate drains are also required for installation of the X94 Professional heater. Follow vent manufacturer instructions for location of condensate drains in the vent. The vent condensate should also be routed through a treatment kit (P/N 100-10002839), as required by local code requirements.

The treatment kit must be sized to the condensate generated by the appliance and the vent.

The expected condensate volume is approximately 4 GPH (15 LPH).

CAUTION: In general, the condensate piping from the appliance must have a downward slope of 1⁄4" per horizontal foot. Condensate drain traps must be primed with water to prevent gas flue leaks. Treatment kits should be checked at least once per year to ensure that the pH of the effluent remains 5.0 or higher, and the chips should be replenished as necessary. When replacing the chips, they should be no smaller than 3⁄4" to avoid blockage in the condensate piping. Figure 6 on page 15 is a visual guide only. Follow the manufacturer's instructions for the installation of the treatment kit and condensate drains.

⚠WARNING: The expected condensate volume shall not exceed 4 GPH (15 LPH).

Venting Configurations

For heaters connected to gas vents or chimneys, vent installations shall be in accordance with the NFGC (U.S.), or B149 (Canada), or applicable provisions of local building codes.

Vertical Venting (Category IV) Installation

CAUTION: A listed vent cap terminal, adequately sized, must be used to evacuate the flue products from the building.

⚠CAUTION: This venting system requires the installation of a condensate drain in the vent piping per the vent manufacturer's instructions. Failure to install a condensate drain in the venting system will cause non-warrantable damage. Condensate is acidic and highly corrosive.

NOTE: Ensure adequate clearances to allow annual inspection of the venting system.

The connection from the appliance vent to the stack must be as direct as possible and shall be the same diameter as the vent outlet. The horizontal breaching of a vent must have an upward slope of not less than 1/4" (6.35 mm) per linear foot (305 mm) from the heater to the vent terminal.

The horizontal portions of the vent shall also be supported for the design and weight of the material employed to maintain clearances and to prevent physical damage or separation of joints.

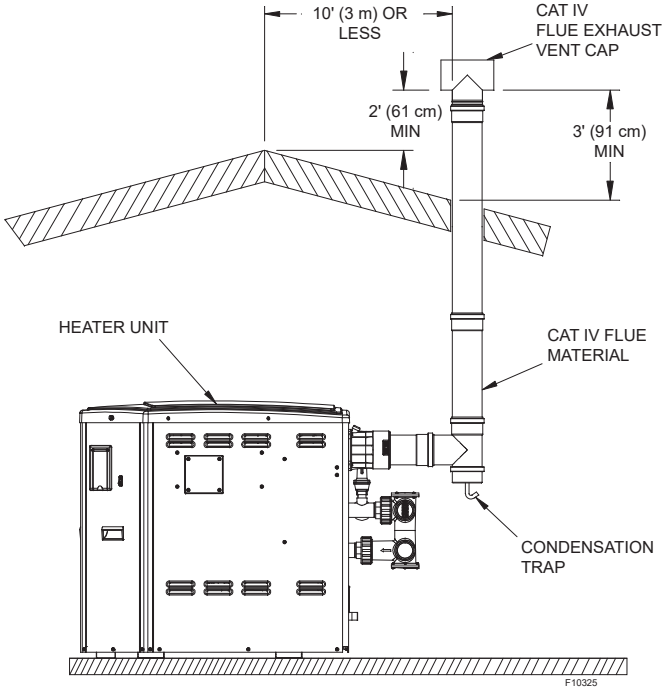

Figure 6. Vertical Venting

NOTE: A vent adapter (field-supplied) may be required to connect other types of Category IV vents to the heater. The supplied vent adapter allows for direct connection to DuraVent PolyPro, Duravent FasNSeal, Sch 40 PVC and Sch 40 CPVC.

Termination

The vent terminal should be vertical and should terminate outside the building at least 3' (0.91 m) above the highest point where it passes through the roof and 2' (0.61 m) above the highest point of the roof or building that is within 10' (3 m) horizontally. The vent cap should have a minimum clearance of 4' (1.2 m) horizontally from and in no case above or below (unless a 4' (1.2 m) horizontal distance is maintained) electric meters, gas meters, regulators and relief equipment.

The distance of the vent terminal from adjacent public walkways, adjacent buildings, open windows and building openings must be consistent with the NFGC (U.S.) or B149 (Canada). Vents supported only by flashing and extending above the roof more than 5 ft. (1.5 m) should be securely guyed or braced to withstand snow and wind loads.

NOTE: When using PVC Tee vent as termination, insert the round stainless mesh screens provided with the unit into the tee ends.

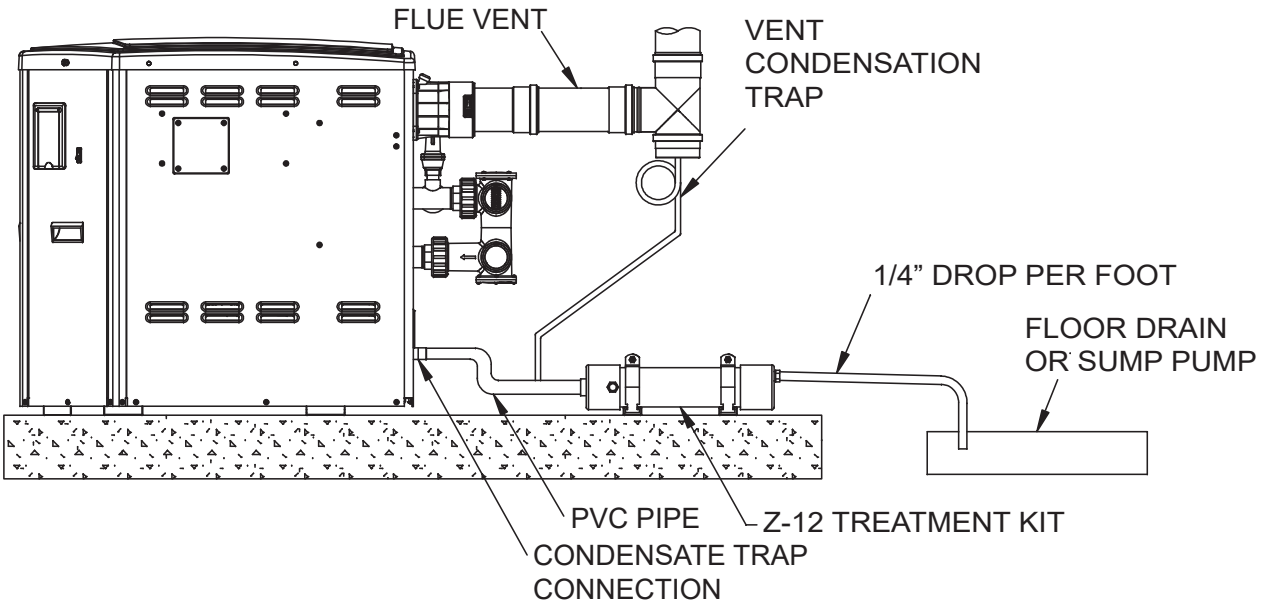

Figure 7. Condensate Piping

Horizontal Through-the-Wall Venting (Category IV)

Installation

CAUTION: This venting system requires the installation of a condensate drain in the vent piping per the vent manufacturer's instructions. Failure to install a condensate drain in the venting system will cause damage which will not be covered under warranty.

These installations utilize the heater-mounted blower to vent the combustion products to the outdoors. Combustion air is taken from inside the room and the vent is installed horizontally through the wall to the outdoors. Adequate combustion and ventilation air must be supplied to the equipment room in accordance with the NFGC (U.S.) or B149 (Canada).

The total length of a 4" horizontal through-the-wall flue system must not exceed 65 equivalent ft. (19.8 m) in length. If horizontal run exceeds 65 equivalent ft. (19.8 m), either the flue must be increased to 5" or 6" using field-supplied adapters, or an appropriately-sized variable-speed extractor must be used. Each elbow used is equal to 10' (3.m) of straight pipe. If using 5" or 6" flue, max. effective length is 150 ft. (45.7 m). Example using 4" pipe, this will allow installation in one of the five following arrangements:

- 65' (19.8 m) of straight flue pipe
- 55' (16.8 m) of straight flue pipe and one elbow
- 45' (13.7 m) of straight flue pipe and two elbows
- 35' (10.7 m) of straight pipe and three elbows
- 25' (7.6 m) of straight pipe and four elbows

The vent cap is not considered in the overall length of the venting system.

The vent must be installed to prevent flue gas leakage. Care must be taken during assembly to ensure that all joints are sealed properly and are airtight. The vent must be installed to prevent the potential accumulation of condensate in the vent pipes. It is recommended that the vent be insulated. Insulation is required for installations in cold environments (i.e. below 40°F or 4°C). It is required that:

1. The vent must be installed with a condensate drain located in proximity to the heater as directed by the vent manufacturer.
2. The vent must be installed with a slight upward slope of not less than 1/4" per foot (6.35 mm per 305 mm) of horizontal run to the vent terminal.

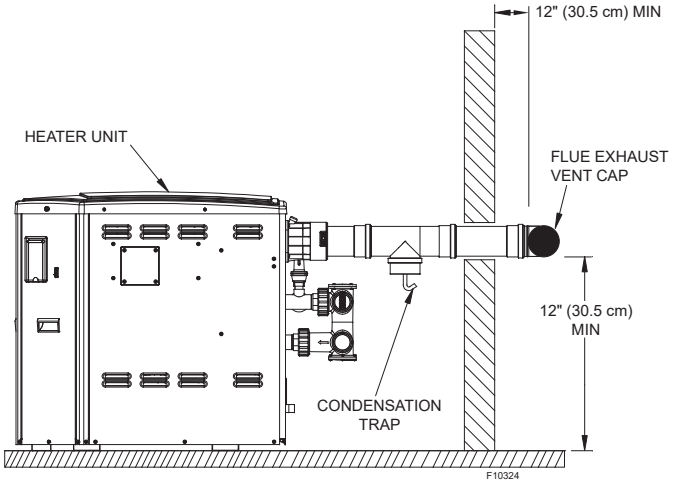

Figure 8. Horizontal Through-the-Wall Venting

The maximum and minimum venting length for this Category IV appliance shall be determined per the NFGC (U.S.) or B149 (Canada).

Certified Exhaust Vent Material	Vent and Intake Air Size	Vent Length		Combustion Air Intake Pipe Material	Intake Air Max. Length
		Min.	Max.		
Stainless Steel, AL29-4C, ANSI/ASTM D1785 Sch 40 PVC, ANSI/ASTM F441 Sch 40 CPVC, DuraVent Polypropylene**	4"	5' (1.5 m)	65' * (19.8 m)	Galvanized Steel, PVC, ABS, CPVC	65' * (19.8 m)

Subtract 10' (3.05 m) per elbow. Max. 4 elbows.

* This unit is CSA-approved for up to 150 ft. (45.7 m) effective length of 5" or 6", using field-supplied adapters.

**Only Duravent polypropylene is approved for the X94 Professional heater.

Table I. Category IV Vent Requirements

Size	Approved Air Intakes	Approved Plastic Terminals	Approved SS Terminals
4"	PVC 90° Elbow, Sch 40 Galvanized 90° Elbow, SS 90° Elbow, ABS 90° Elbow	4" PVC/CPVC Tee Sch 40*	FasNSeal FSTT4

* Must be ULC-S636 materials in Canada.

Table J. Horizontal Vent and Air Intake Terminals

Termination

The direct vent cap (sales order option D-15) MUST be mounted on the exterior of the building. The direct vent cap cannot be installed in a well or below grade. The direct vent cap must be installed at least 1' (30.5 cm) above ground level and above normal snow levels. A Raypak approved vent cap must be used. The vent terminal must be located NO CLOSER than 12" (30.5 cm) off the wall.

⚠WARNING: No substitutions of flue pipe or vent cap material are allowed. Such substitutions would jeopardize the safety and health of inhabitants.

Direct Vent – Horizontal Through-the-Wall

Installation

These installations utilize the heater-mounted blower to draw combustion air from outdoors and vent combustion products to the outdoors. Connect the air duct to the heater using kit (P/N 015527F), shipped loose in the box with the heater.

The total length of a 4" through-the-wall flue and air intake cannot exceed the values listed in **Table I**. Each elbow used is equal to 10' (3 m) of straight pipe. For example using 4" pipe, this will allow installation in one of the five following arrangements:

- 65' (19.8 m) of straight flue pipe
- 55' (16.8 m) of straight flue pipe and one elbow
- 45' (13.7 m) of straight flue pipe and two elbows
- 35' (10.7 m) of straight pipe and three elbows
- 25' (7.6 m) of straight pipe and four elbows

If either the flue run or the air intake run exceeds 65 ft. (19.8 m) effective length, they must be increased to 5" or 6" using field-supplied adapters. Max effective length then is 150 ft. (45.7 m).

The flue direct vent cap and air intake elbow are not considered in the overall length of the venting system.

Care must be taken during assembly that all joints are sealed properly and are airtight.

The vent must be installed to prevent the potential accumulation of condensate in the vent pipes. It is recommended that the vent be insulated. Insulation is required for installations in cold environments (i.e. below 40°F or 4°C).

For installations in extremely cold climate, it is required that:

- The vent must be installed with a slight upward slope of not more than 1/4" per foot (6.35 mm per 305 mm) of horizontal run to the vent terminal. An approved condensate trap must be installed per applicable codes.
- The intake vent must be insulated through the length of the horizontal run.

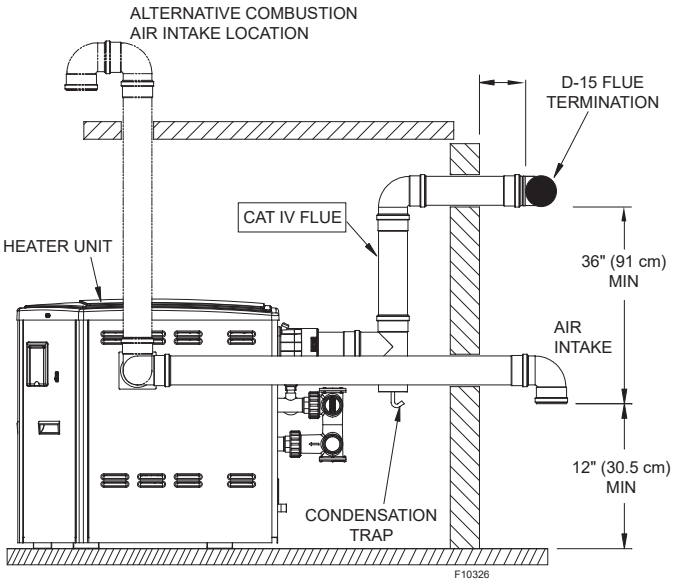

Figure 9. Horizontal Through-the-Wall Direct Venting

Termination

The flue termination (sales order option D-15) MUST be mounted on the exterior of the building. It cannot be installed in a well or below grade. It must be installed at least 1' (30.5 cm) above ground level and above normal snow levels.

The D-15 flue termination MUST NOT be installed with any combustion air inlet directly above it within 3 ft. (0.91 cm). This vertical spacing would allow the flue products from the flue termination to be pulled into the combustion air intake installed above.

This type of installation can cause non-warrantable problems with components and poor operation of the heater due to the recirculation of flue products. Multiple flue terminations installed in the same horizontal plane must have a 4' (1.2 m) clearance from the side of one termination to the side of the adjacent vent cap(s). It is preferable to install multiple vent terminations in a vertical line, see **Figure 10**.

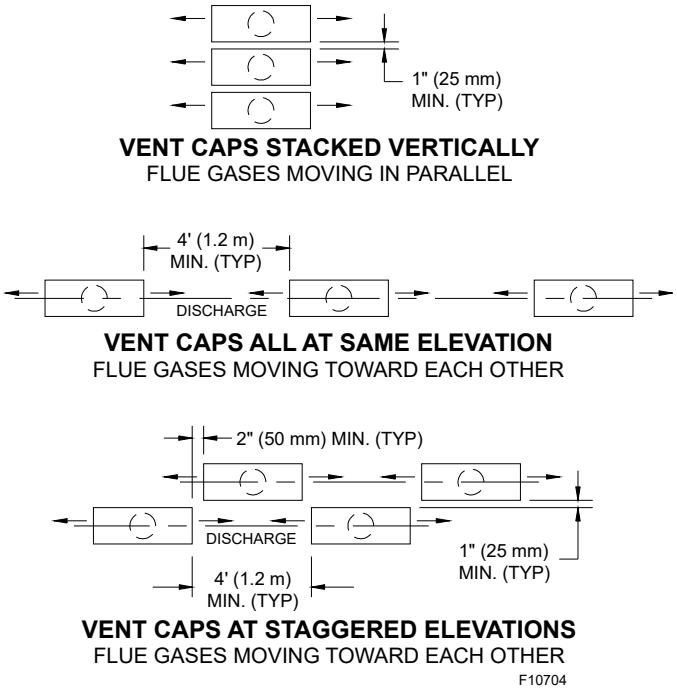

Figure 10. Vent Cap Configurations

Combustion air supplied from outdoors must be free of particulate and chemical contaminants. To avoid a blocked flue condition, keep the flue termination clear of snow, ice, leaves, debris, etc.

⚠WARNING: No substitutions of flue pipe or vent termination material are allowed. Such substitutions would jeopardize the safety and health of inhabitants.

⚠CAUTION: Condensate is acidic and highly corrosive.

The through-the-wall vent termination MUST be furnished by the heater manufacturer in accordance with its listing.

Use only the special gas vent pipes listed for use with Category IV gas burning heaters, such as the AL29-4C stainless steel vents offered by M&G DuraVent (800-835-4429), Selkirk Inc. (1-800-992-VENT or 1-800-992-8368 in the US, or 1-888-SEL-KIRK or 1-888-735-5475 in Canada), Protech System, Inc. (800-766-3473), Z-Flex (800-654-5600) or American Metal Products (800-423-4270). Additionally, M&G DuraVent PolyPro special gas vent and, where allowed, PVC and CPVC Sch 40 pipe with appropriate listings may be used. Pipe joints must be positively sealed. Follow the vent manufacturer's installation instructions carefully.

Direct Vent – Vertical

Installation

These installations utilize the heater-mounted blower to draw combustion air from outdoors and force the heated flue products through the vent pipe under positive pressure. The vent material must be in accordance with the above instructions for vent materials. Vent material must be listed by a nationally-recognized test agency.

The connection from the appliance flue to the stack must be as direct as possible and should be the same size or larger than the vent outlet.

It is recommended that the intake vent be insulated in colder climates.

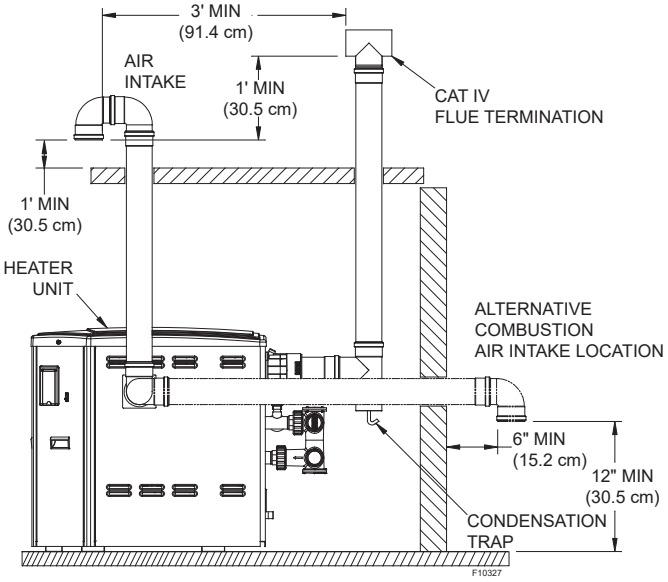

Figure 11. Direct Vent - Vertical

Termination

The flue should be vertical and should terminate outside the building at least 2' (61 cm) above the highest point of the roof within 10' (3 m).

⚠WARNING: No substitutions of vent pipe or vent termination material are allowed. Such substitutions would jeopardize the safety and health of inhabitants.

The distance of the vent terminal from adjacent public walkways, adjacent buildings, open windows and building openings must be consistent with the NFGC (U.S.) or B149 (Canada).

Vent pipes supported only by flashing and extended above the roof more than 5' (1.5 m) should be securely guyed or braced to withstand snow and wind loads.

The air inlet opening MUST be installed 1' (30.5 cm) above the roof line or above normal snow levels that might obstruct combustion air flow. This dimension is critical to the correct operation of the heater and venting system and reduces the chance of blockage from snow. The flue termination must have a minimum 3' (91 cm) vertical clearance from the air inlet opening.

Use only the special gas vent pipes listed for use with Category IV gas burning heaters, such as the AL29-4C stainless steel vents offered by Selkirk Inc. (1-800- 992-VENT or 1-800-992-8368 in the US, or 1-888- SEL-KIRK or 1-888-735-5475 in Canada), Protech System, Inc. (800-766-3473), Z-Flex (800-654-5600) or American Metal

Products (800-423-4270). Pipe joints must be positively sealed. Follow the vent manufacturer's installation instructions carefully.

Outdoor Installation

A 5" (127 mm) length of 4" schedule 40 PVC pipe and a 4" schedule 40 PVC Tee are provided for typical outdoor installations. If needed additional vent may be added to locate the vent discharge away from the appliance. The venting must not exceed the lengths listed in **Table I**. When additional venting is supplied, the vent must be supported and traps installed. In cold climates, it may be necessary to insulate the additional venting.

Care must be taken when locating the heater outdoors, because the flue gases discharged from the flue termination can condense as they discharge. Improper location can result in damage to adjacent structures or building finish. For maximum efficiency and safety, the precautions on page 21 must be observed:

1. Periodically check venting system. The heater's venting areas must never be obstructed in any way and minimum clearances must be observed.

NOTE: Remove the unused gaskets from the 3-in-1 appliance vent adapter. For example, when using the supplied PVC vent pipe remove the inner two gaskets (See Figure 13).

NOTE: Condensate can freeze on the flue termination. Frozen condensate on the flue termination can result in a blocked flue condition.

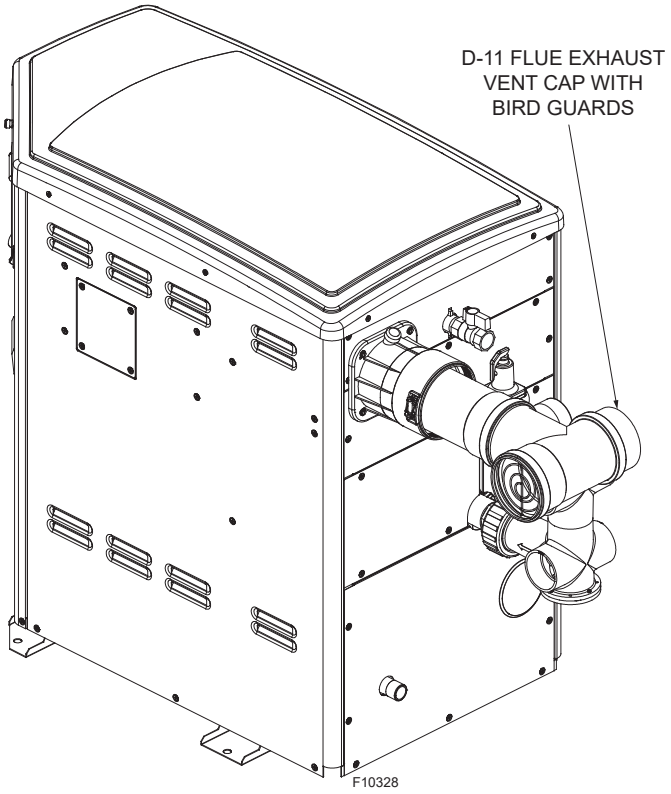

Figure 12. Outdoor Venting

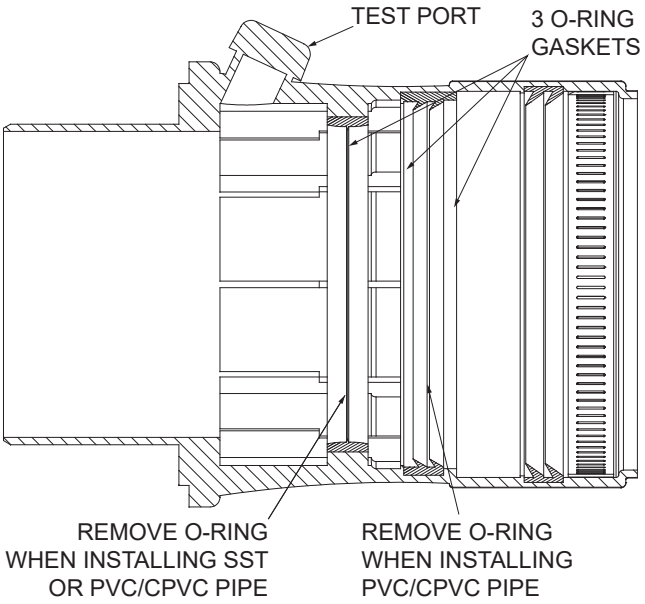

Figure 13. Multi-Vent Adapter

INSTRUCTIONS FOR THE STATE OF FLORIDA AND FOR AREAS OF TEXAS DESIGNATED BY THE TEXAS DEPARTMENT OF INSURANCE

ULTIMATE WIND SPEED = 170 MPH (274 km/h), 3 SECOND GUST
NOMINAL WIND SPEED = 132 MPH (212 km/h)
EXPOSURE = C

Gas Heater Model No. 410

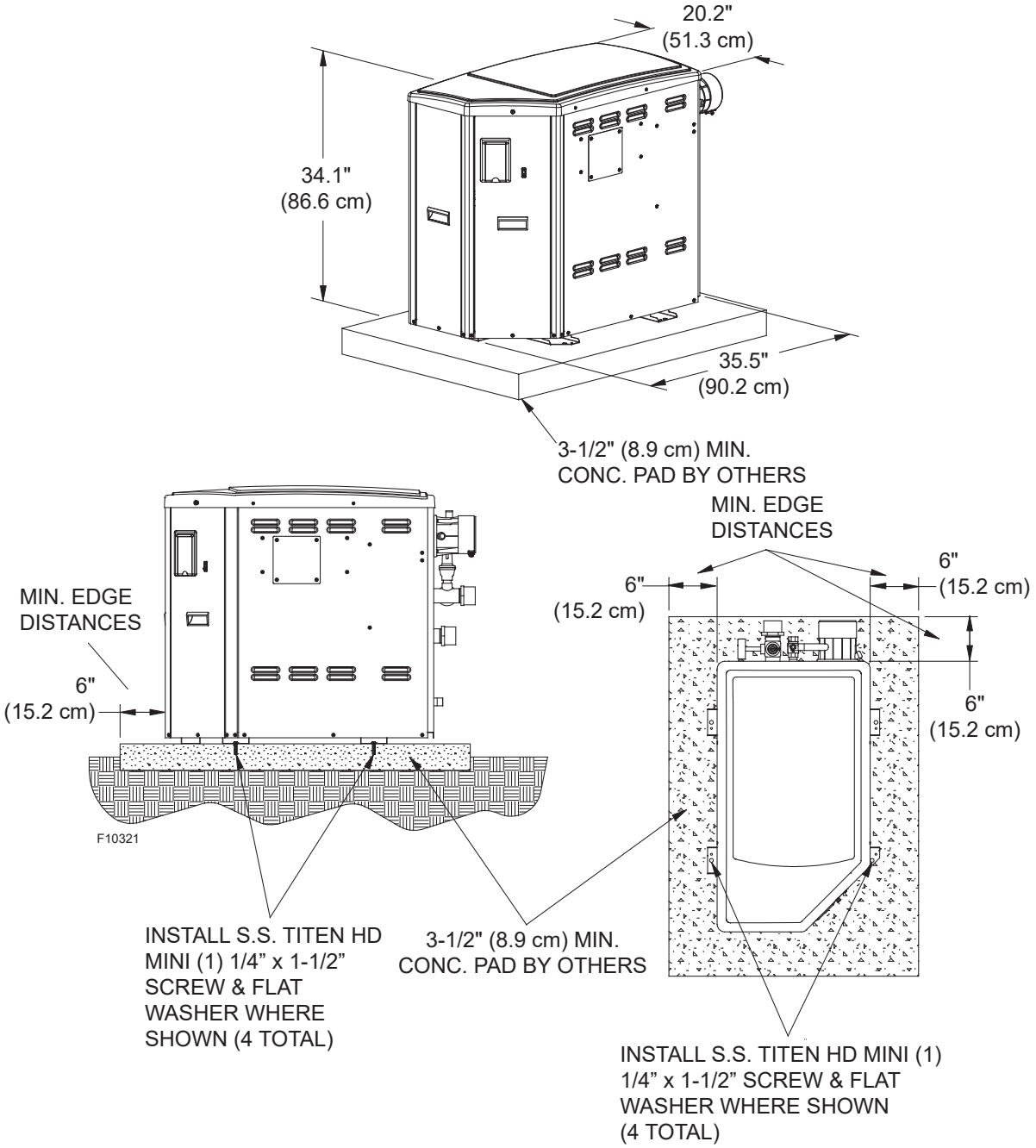

Figure 14. Hurricane Tie Down Instructions

Gas Supply Connections

Gas piping must have a sediment trap ahead of the heater gas controls, and a manual shutoff valve located outside the heater jacket. All gas piping should be tested after installation in accordance with local codes.

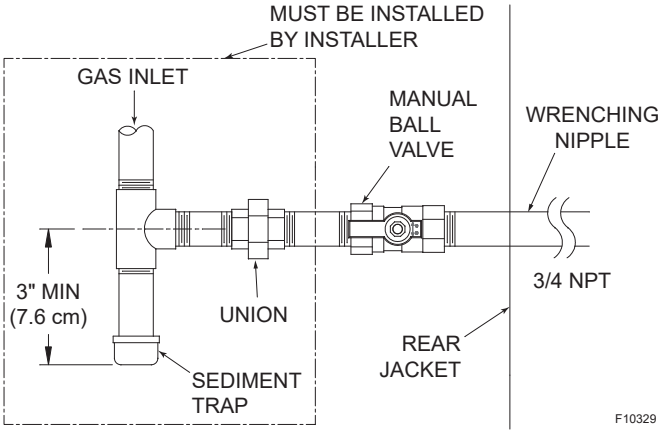

Figure 15. Gas Supply Connections

⚠CAUTION: The heater and its manual shutoff valve must be disconnected from the gas supply during any pressure testing of that system at test pressures in excess of 1/2 psi (3.45 kPa). Dissipate test pressure in the gas supply line before reconnecting the heater and its manual shutoff valve to gas supply line. FAILURE TO FOLLOW THIS PROCEDURE MAY DAMAGE THE GAS VALVE. OVER-PRESSURIZED GAS VALVES ARE NOT COVERED BY WARRANTY. The heater and its gas connections shall be leak tested before placing the appliance in operation. Use soapy water for leak test. DO NOT use open flame.

NOTE: Do not use Teflon tape on gas line pipe thread. A pipe compound rated for use with natural and propane gases is recommended. Apply sparingly only on male pipe ends, leaving the two end threads bare.

Gas Regulator Best Practices

From the gas pressure regulator it is recommended to have no less than 10 pipe diameters of straight smooth pipe downstream of the regulator discharge and to have no less than 10 linear feet (not including fittings) between the regulator and the inlet to the appliance for proper operation.

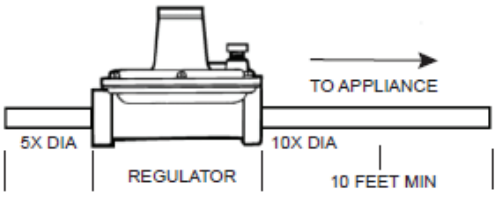

Figure 16. Gas Regulator Distances

Supply Pressures

A minimum of 4" WC (1 kPa) and a maximum of 10.5" WC (2.62 kPa) upstream pressure under load and no-load conditions must be provided for natural gas. A minimum of 12" WC (3 kPa) and a maximum of 14" WC (3.5 kPa) are required for propane gas under load and no-load conditions, with no more than a 30% pressure drop between static pressure and full load.

Set actual gas manifold pressure based on CO_2 emissions, using a flue gas analyzer at time of startup. The factory manifold pressure settings should be -2.0" ± 0.5" WC (0.5 ± 0.12 kPa) at high fire (7500 +/- 50 RPM fan-speed) for either natural or propane gas.

Gas Pressure Adjustment Locations

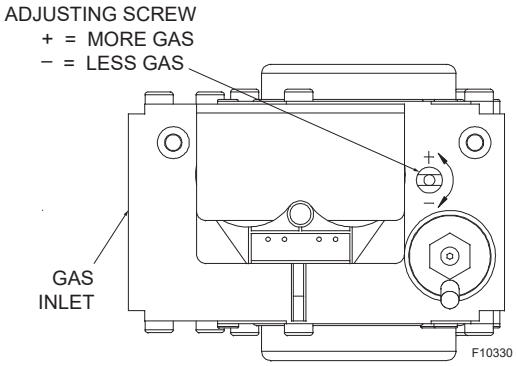

Figure 17. Gas Valve

Pipe Sizing For Gas Connections

Maximum Equivalent Pipe Length, ft. (m)							
3/4"		1"		1-1/4"		1-1/2"	
NAT	PRO	NAT	PRO	NAT	PRO	NAT	PRO
*	15 (4.6)	20 (6.1)	55 (16.8)	95 (29)	225 (68)	215 (65)	480 (146)
	4.6 (1.4)	6.1 (1.8)	16.8 (5.1)	29 (8.8)	68.6 (21)	65.5 (20)	146 (44)

Natural Gas 1000 BTU/FT3 0.60 Specific Gravity @ 0.5 in. WC Pressure Drop.

Propane Gas 2500 BTU/FT3 1.53 Specific Gravity @ 0.5 in. WC Pressure Drop.

* A 3/4" gas line can be used for up to 5' (1.5 m) maximum length from the gas valve in addition to the sediment trap.

Table K. Gas Line Sizing

Heat Exchanger Pressure Drop Tables

Heat Exchanger with External Automatic Bypass	
WATER FLOW GPM (lpm)	HEAD LOSS FT. WC. (kPa)
40 (151)	5.3 (1.32)
50 (189)	5.9 (1.47)
60 (227)	6.2 (1.54)
70 (265)	7.2 (1.79)
80 (303)	8.6 (2.14)
90 (341)	9.7 (2.42)
100 (371)	11.3 (2.81)
110 (4161)	13.2 (3.29)
120 (4541)	15.3 (3.81)
125 (4731)	16.5 (4.11)

Table L. Heat Exchanger Pressure Drop

Flow Rates

PIPE SIZE*	MIN. GPM (lpm)	MAX. GPM** (lpm)
1-1/4", 1-1/2", 2"	40 (151)	125 (473)

* Must maintain minimum flow rate. Pipe size may further restrict flow.

** When flow rates through the heater exceed maximum allowable GPM, an external auxiliary bypass valve is required. See "External Auxiliary Bypass Valve" for details.

Table M. Flow Rates

External Automatic Bypass Valve

An external automatic bypass valve is provided with the heater. The bypass valve automatically responds to changes in water flow in the piping system. The proper amount of water flow is maintained through the heater under varying system flows dictated by the conditions of the pump and filter.

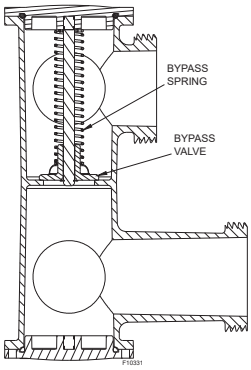

Figure 18. External Automatic Bypass Valve

External Auxiliary Bypass Valve

(Where Required)

An auxiliary bypass valve should be used when flow rates exceed 125 GPM (473 lpm). Usually a high-performance pump larger than two horsepower will exceed this flow rate. This valve is required to complement the function of the automatic bypass valve, particularly when starting the heater in winter or early spring when the spa or pool temperature is below 50°F (10°C). It also serves to eliminate needless pressure drop through the heater and accompanying reduction in the flow rate to the spa jets, etc.

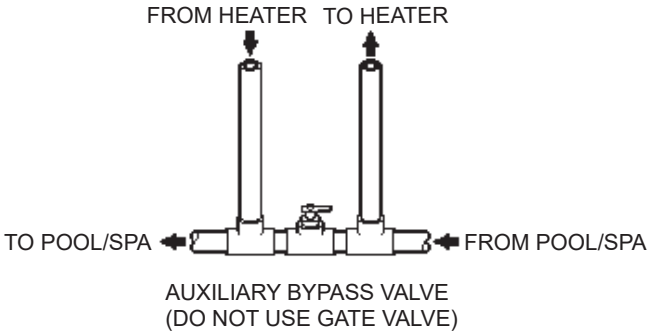

Figure 19. Auxiliary Bypass Valve

Auxiliary Bypass Valve Adjustment

To set bypass: with clean filter, adjustment is made by feeling the inlet and outlet pipes at the heater. Outlet pipes should be slightly warmer than inlet and comfortable to the touch. If pipe is hot, close bypass; if cold, open bypass.

Pressure Relief Valve Piping

The heater is supplied with a pressure relief valve, sized for the maximum output of the heater, and set at 125 psig. The pressure relief valve outlet must be plumbed to a safe point of discharge.

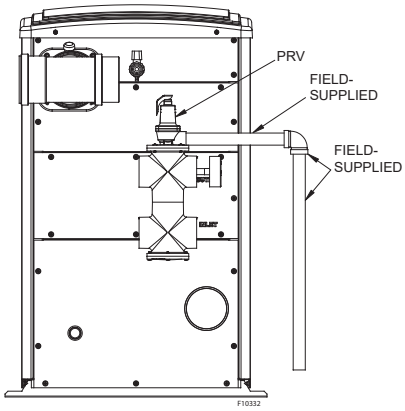

Figure 20. PRV Piping

NOTE: To avoid water damage or scalding due to valve operation, drain pipe must be connected to valve outlet and run to a safe place of discharge. Drain pipe must be the same size as the valve discharge connection throughout its entire length and must pitch downward from the valve. No shutoff valve shall be installed between the relief valve and the drain line. Valve lever should be tripped at least once a year to ensure that waterways are clear.

Electrical Wiring

NOTE: If it is necessary to replace any of the original wiring, use 105°C wire or its equivalent, and/or 150°C wire or its equivalent, like the original wiring.

⚠WARNING: Heaters are factory-wired for a 120 VAC, 60 Hz, single-phase power supply. DO NOT attempt to operate with any other power supply.

CAUTION: Heater must be electrically grounded and bonded. Bonding lug is provided loose with the heater. Install bonding lug on lower right or left-side of jacket as necessary for bonding the heater. Mounting hole is provided on the jacket.

NOTE: Failure to ground the heater electrically could affect the heater's electronics.

The Electronic Intermittent Ignition Device automatically lights the main burner upon a call-for-heat.

NOTE: See page 36 for further instructions if using a time clock/fireman's switch.

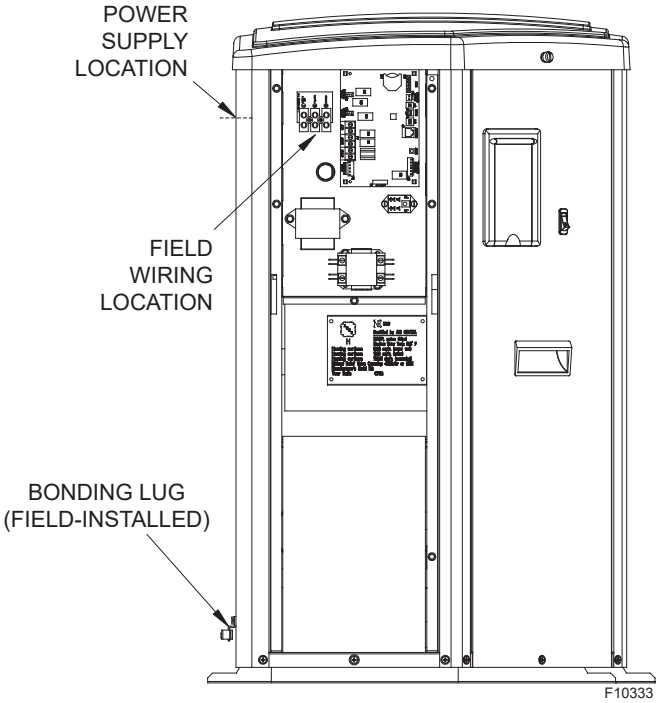

Figure 21. Wiring Locations

Transformer Wiring

120 VAC Wiring

The heater requires 5 amps of 120V/1ph/60Hz power. To wire the 120V power supply to the heater, connect the pair of black wires to the "L1" or hot leg of the power supply. Connect the pair of white wires to the "Ret" or neutral leg of the power supply. Attach the wire nut to the red wire. There should be no connection to the red wire.

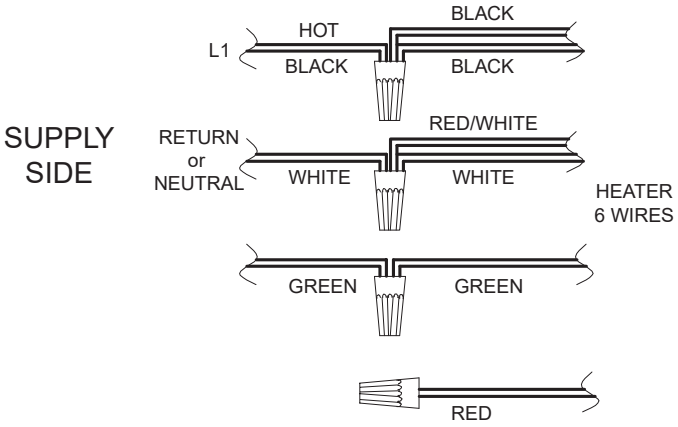

Figure 22. 120 VAC Wiring

The heater must be electrically grounded and bonded in accordance with local codes, or, in the absence of local codes, with the latest edition of the National Electrical Code, ANSI/NFPA 70. (Canada - Canadian Electrical Code, CSA C22.1, Part 1 and Part 2.)

⚠WARNING: The transformer's primary side is wired for 120 VAC and if 240 VAC is applied, damage to the transformer and PC board may result. Such damages are not covered under manufacturer's limited warranty.

NOTE: Input power to the heater (120 VAC) can be supplied from the load (pump) side of time clock or directly from the GFCI power source. It is required that full-time power be supplied to the heater from the GFCI power source, and that the heater be controlled by the fireman's switch connection or using a two or three-wire remote. See pages 35 and 36. If using a switched GFCI power source, the heater post-purge function will be bypassed, adversely affecting heater operation and life.

Plumbing—Water Connections

The heater has standard right-hand plumbing connections, but can be converted to alternate configurations as shown below.

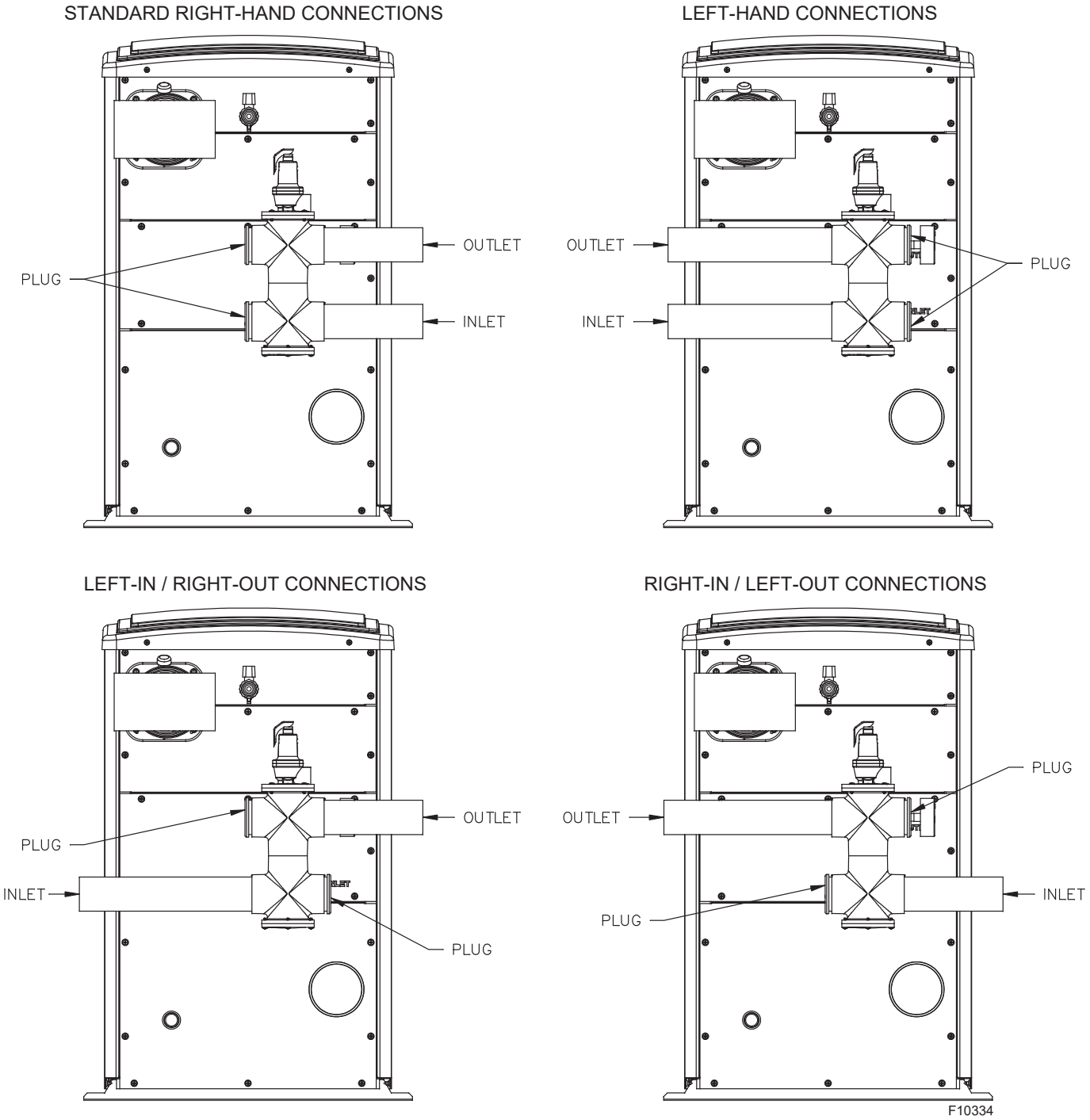

Figure 23. Water Connection Configurations

Loose Plumbing Parts Setup

The loose parts bag contains the pieces needed to connect your plumbing to the heater, see page 7 for list. Two options are recommended for the installer as shown in the following images.

NOTE: Use appropriate CPVC or CPVC to PVC transition primer and glue for attachments.

Recommended Plumbing Setups

The heater requires water flow and positive pressure to fire and operate properly. It must therefore be installed downstream of the discharge side of the filter pump. A typical installation is plumbed as follows:

1. The inlet side of the filter is plumbed directly to the discharge side of the filter pump;
2. The outlet side of the filter is then plumbed to the inlet of the heater; and
3. The outlet of the heater is plumbed to the return line to the pool or spa. The pump, filter and heater are thus plumbed in series (Salt generators and chemical feeders must be down stream of the pool heater).

Plumbing from the heater back to the pool or spa must not have any valves or restriction that could prevent flow when the pump is operating.

CAUTION: An additional source of heated water, e.g. a solar system, must be connected to the main line ahead of the heater inlet pipe in order for it to act as the primary heat source. If the primary system provides adequate heat to maintain setpoint, the heater will not fire. Be advised that the control panel will then display sensed water temperatures downstream of the primary heating system, rather than the temperature of the water exiting the pool.

Heater must be located so that any water leaks will not damage the structure of adjacent area. PVC pipe may be glued directly into the bypass connections.

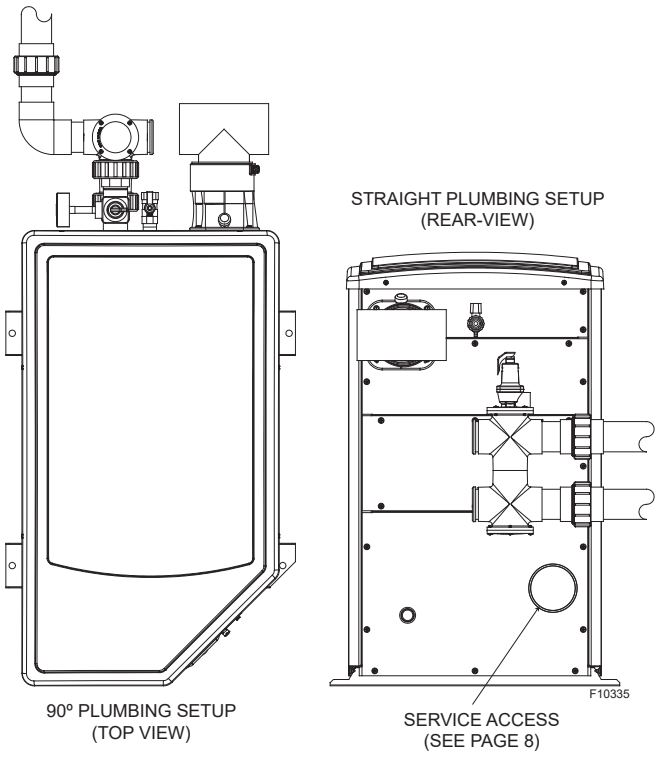

Figure 24. Plumbing Setup

Plumbing Water Connection

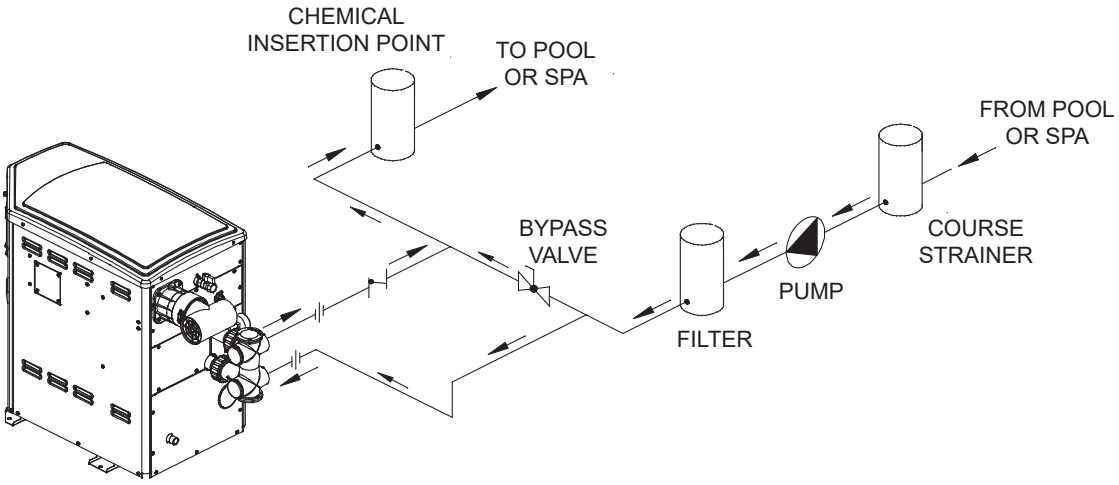

Figure 25. Single Pool or Spa Heater Installation

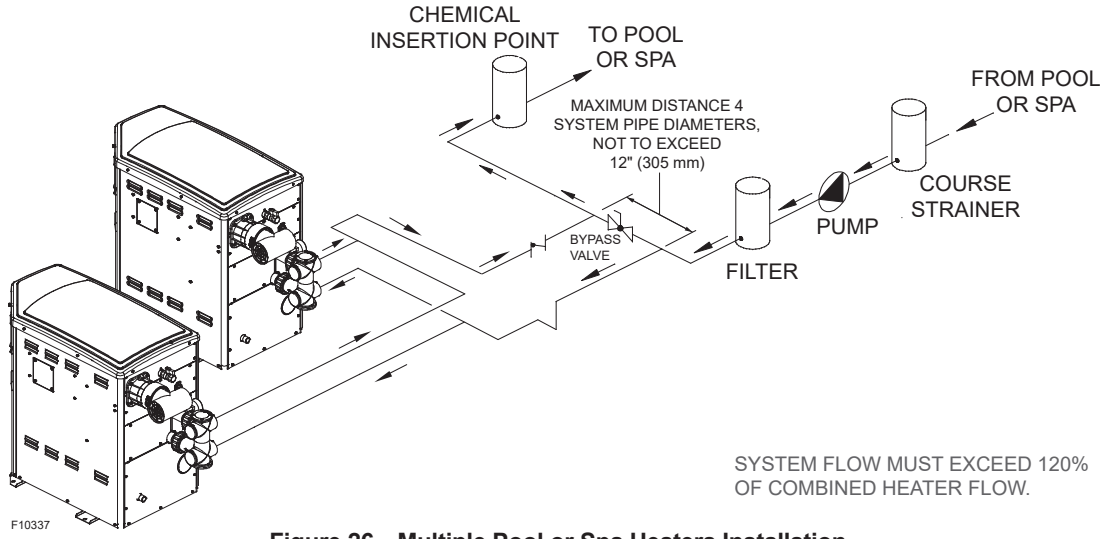

Figure 26. Multiple Pool or Spa Heaters Installation

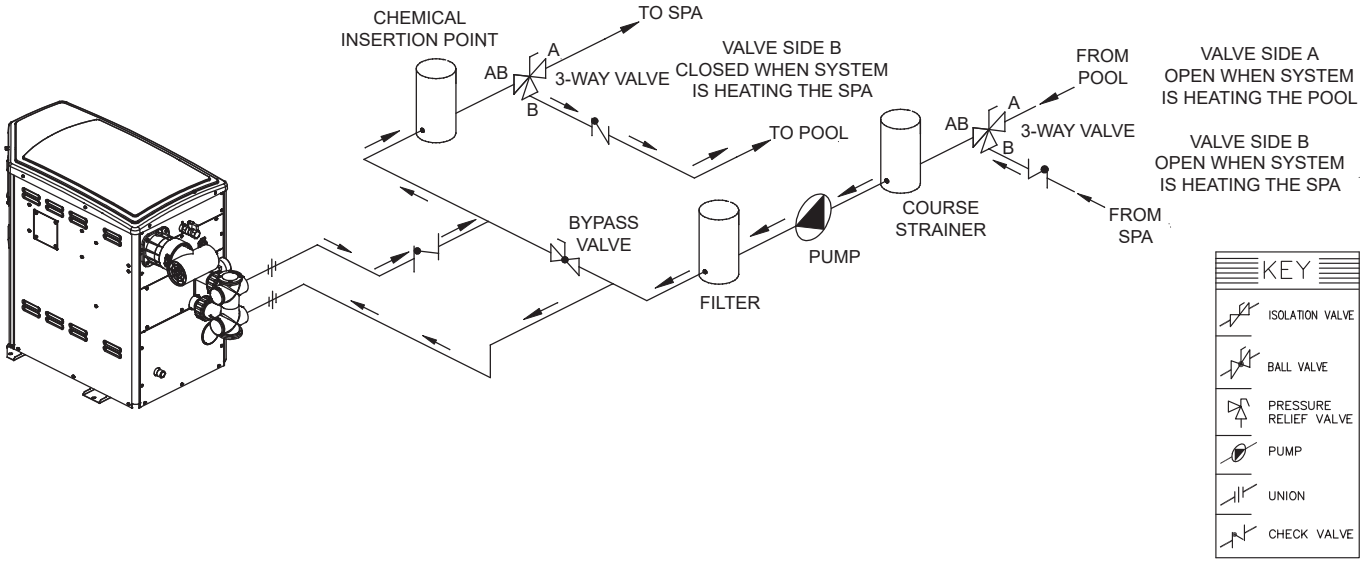

Figure 27. Single Pool/Spa Heater Installation

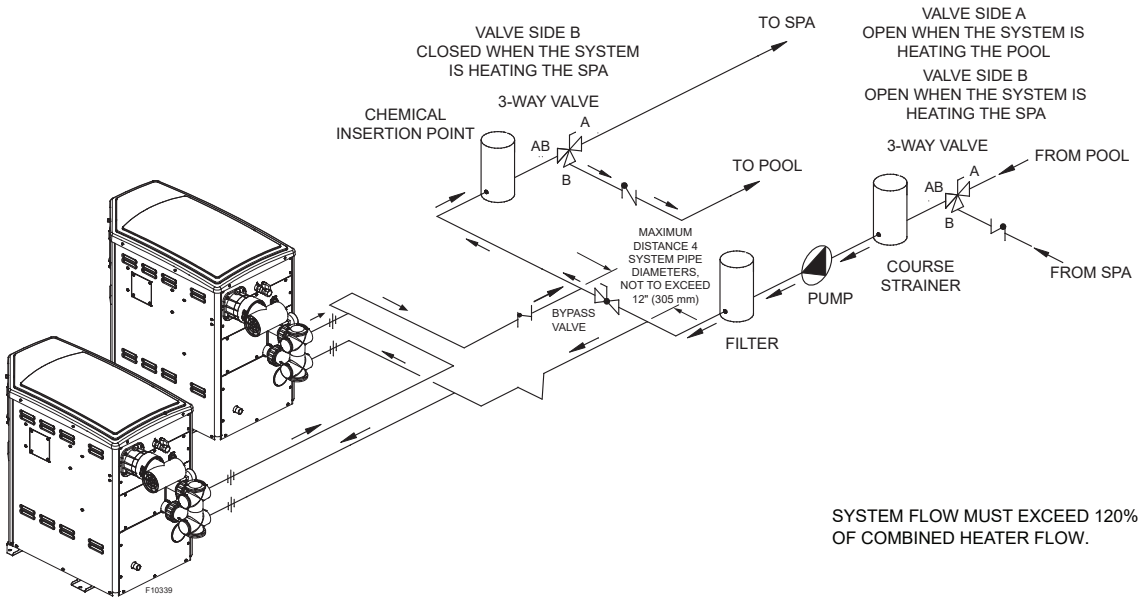

Figure 28. Multiple Pool/Spa Heaters Installation

5. WIRING DIAGRAM

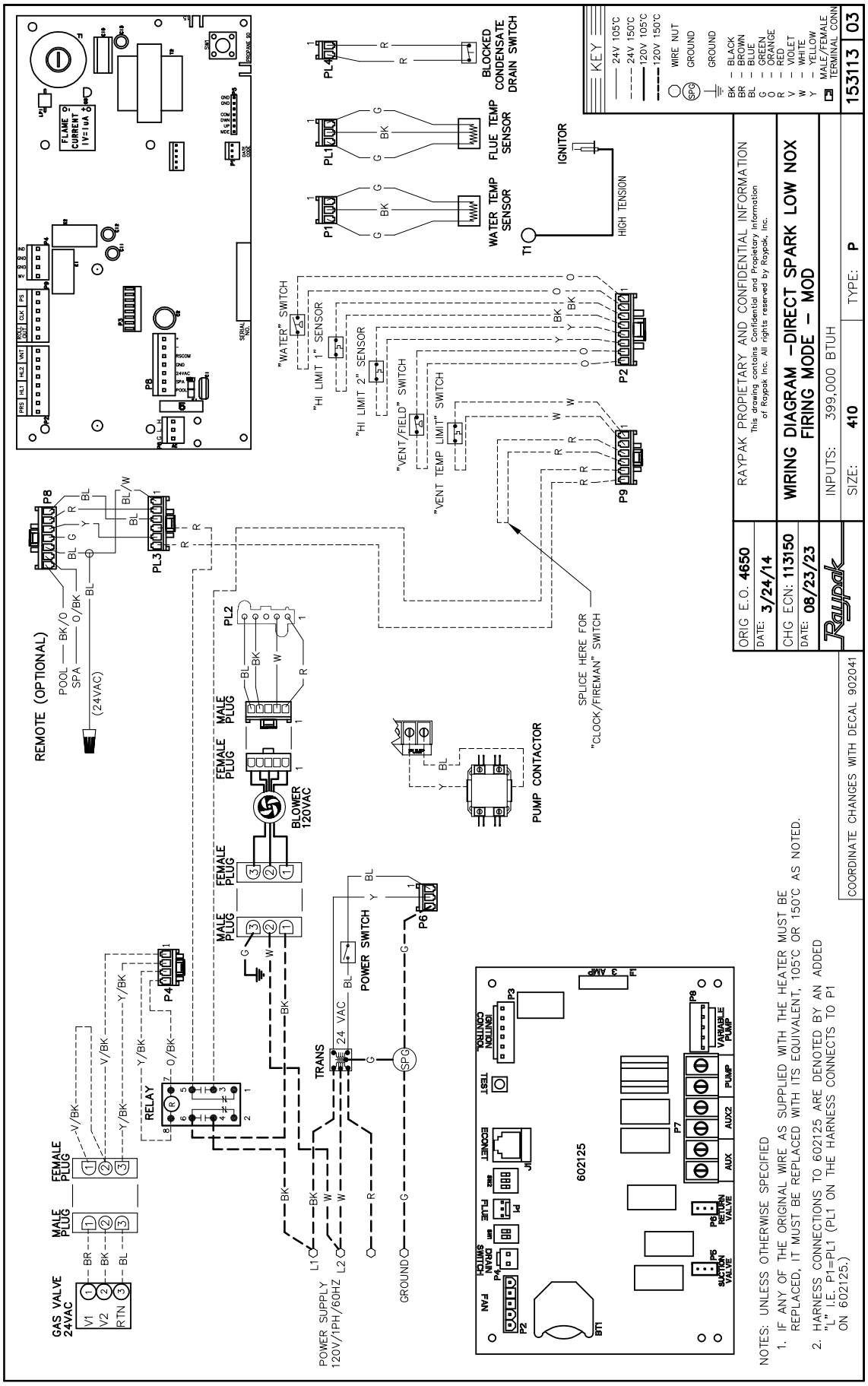

6. CONTROLS

NOTE: Do not stand on the top of the unit, or put weight on it.

General Control Locations

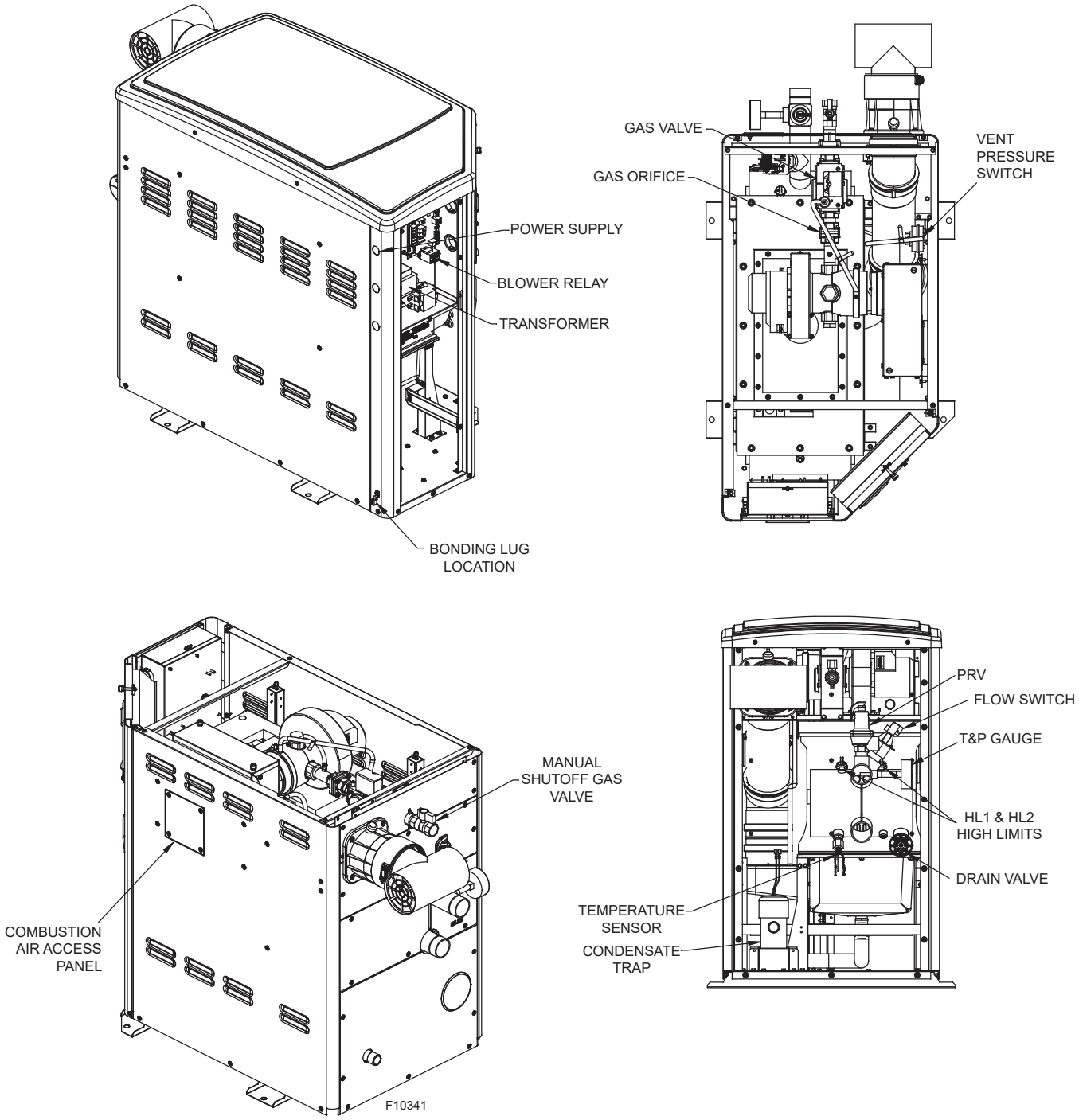

Figure 29. Location of Controls

Control Adjustments

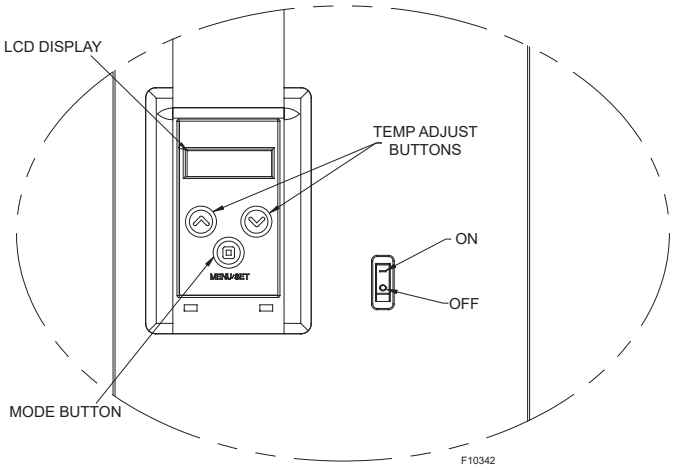

Figure 30. Control Adjustments

Control Panel Removal

To remove the ignition control board from the heater, use the following procedure:

1. Turn off main power to the heater.
2. Remove front door to access wire harnesses.
3. Reaching underneath the ignition board, carefully remove all connectors and wires from the ignition board and ON/OFF toggle switch.
4. Lift the front bezel lid and remove the two lower Phillips screws.
5. Carefully lift the control panel upwards and pull away from the heater.
6. The control panel can now be flipped around to remove or inspect the ignition board.
7. Reverse procedure for re-installation.

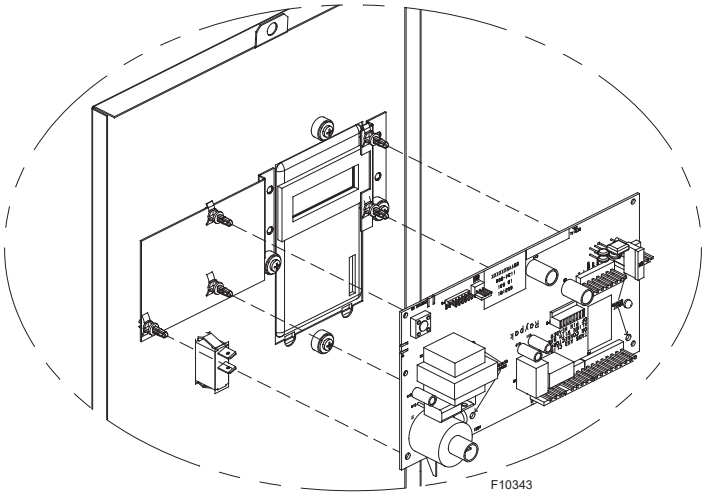

Figure 31. Removing the Ignition Control Board

Thermostat Operation - Ignition Control Board

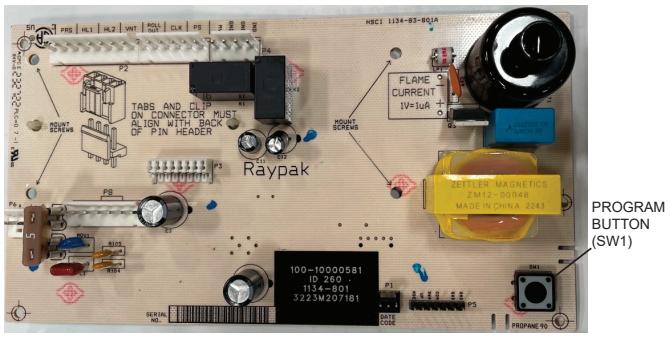

Figure 32. Ignition Control Board

Controls Operation

The pool heater touchpad, located on the upper portion of the angled corner panel of the heater, allows the user to select the mode of operation, adjust the setpoint temperature, configure the heater controls and access diagnostic information. The LCD display window indicates the mode (OFF, SPA, POOL, MANUAL, SCHEDULE A/B), the water temperature and if applicable the heater setpoint and current operating condition. A manual power switch provided turns the control power ON or OFF.

Mode Selection

The MODE button is used to select POOL, SPA, MANUAL OVERRIDE or RUN SCHEDULE operation. It also allows the user to turn the heater off electronically by selecting the OFF mode, allowing the LCD display to remain energized and to continue showing the actual water temperature.

POOL and SPA Modes

In either POOL or SPA mode, the mode, day of week and time are displayed on the top line of the display. The current water temperature, desired water temperature (SETPOINT), and current status are shown alternating on the lower line of the display. The temperature SETPOINT can be adjusted using the UP or DOWN buttons. In POOL mode, the setpoint range is 50°F to 104°F (10°C to 40°C). In SPA mode, the setpoint range is 50°F to 107°F (10°C to 42°]C).

In either POOL or SPA modes, the heater will operate to maintain the desired water temperature, turning the heater on when the temperature falls below the setpoint and turning the heater off when setpoint temperature is reached. Filter pump, motorized valve, auxiliary outputs and heating operation will operate according to INSTALLER SETUP MODE settings (See page 30).

MANUAL OVERRIDE

MANUAL OVERRIDE mode allows manual operation of controller functions for up to 24-hours. The user may

select filter pump speed, activate or deactivate heating, select valve positions (if used) and turn auxiliary relays on (if used) for the desired override time period.

RUN SCHEDULE A/B

RUN SCHEDULE A/B modes will operate the heater and all controlled features according to a user-defined 7-day schedule. The schedules are programmed by pressing and holding the MODE button for 5 seconds while in RUN SCHEDULE mode. Schedules A and B may each be set with up to 4 different operating periods per day, individually for each day of the week, or for the same schedule every day. While operating in RUN SCHEDULE mode, pressing the UP or DOWN buttons will toggle between schedules A and B.

Service Menu and Fault History

To access the Service Menu and Fault History, press the MODE and UP buttons simultaneously for 3 to 5 seconds. The heater will continue to operate normally while in the Service Menu. While in the Service Menu use the UP and DOWN buttons to make changes (where available) and the MODE button to enter changes and/or move to the next item.

Fault History - Use the UP and DOWN buttons to view the last 10 fault codes recorded. See **Table N** for a description of the faults and errors.

Clear Faults – Faults may be cleared by selecting YES and pressing MODE.

Run Hours/Cycles (view only) – The Run Hours indicates the total hours of operation for the pool heater, as measured by the amount of time that the main gas valve has been powered. The Cycle count indicates the number of on/off cycles of the heater, as measured by the number of times the main valve has been powered.

Voltage (view only) – Displays the incoming control voltage. Normal readings range from 24-29 Volts.

Water (view only) – Displays the current sensed water temperature at the inlet of the heater. Note: This temperature will not be an accurate representation of the pool or spa temperature unless the filter pump is running.

Flame Strength (view only) – Indicates flame signal strength when the heater is firing. A signal of less than 4 indicates a weak flame signal and may require service.

Fan RPM (view only) - Indicates Fan RPM target (lower left) and actual (lower right) speeds.

Installer Setup Mode

The Installer Setup Mode is accessed by pressing and holding the program button (SW1) on the back of the temperature/ignition control board (see **Figure 32**) for 5 seconds. SW1 can be accessed by either removing the top of the heater or by removing the door panel where the control is mounted (the wiring includes a service loop to allow the panel to be removed providing access to the board without removing the wiring). In Installer Setup Mode the UP and DOWN buttons are used to modify items and the MODE button is used to move between menu items and to store changes. If no button is pressed for 60 seconds the control will exit Installer Setup Mode and any value change of the current item will not be saved in memory.

Set Current Time

Use the UP and DOWN buttons to set the current time. Press MODE to save and move on to the next item.

Set Current Day

Use the UP and DOWN buttons to set the current day of the week. Press MODE to save and move on to the next item.

C/F Display – Celsius or Fahrenheit temperature scale selection

Use the UP or DOWN buttons to select Fahrenheit or Celsius for the temperature display. Choose the desired temperature scale and press MODE to save and move on to the next item.

Spa Max Temp – Spa Set Point Maximum Adjustment

Use the UP and DOWN buttons to change the maximum spa temperature setting to your desired value. The control can be set for a maximum of 107°F (41.6ºC). Press MODE to save and move on to the next item.

Pool Max Temp – Pool Set Point Maximum Adjustment

Use the UP and DOWN buttons to change the maximum pool temperature setting to your desired value. The control can be set for a maximum of 104°F (4°C). Press MODE to save and move on to the next item.

Pool Fan Mode – Eco – Efficiency or Turbo – Rapid Heat Selection

Use the UP and DOWN buttons to select Eco – Efficiency or Turbo – Rapid Heat mode of operation. Eco mode offers increased efficiency and reduced operating sound levels by reducing the operating fan speed by 30%. Turbo mode operates to provide maximum heat input for the shortest heat up times.

Spa Fan Mode - Eco – Efficiency, Turbo – Rapid Heat or Comfort Modulate Selection

Use the UP and DOWN buttons to select Eco – Efficiency, Turbo – Rapid Heat or Comfort - Modulate mode of operation. Eco mode offers increased efficiency and reduced operating sound levels by reducing the operating fan speed and gas input rate by 30%. Turbo mode operates to provide maximum heat input for the shortest heat up times. Comfort mode offers fast heat up, operating at maximum input until the spa return water temperature approaches setpoint. Once within 1.5°F (0.8°C) of setpoint the heater begins to modulate the input rate to match the

required heating load. Comfort mode provides a steady stream of heated water to the spa, reducing heater on/off cycles.

Flue Monitor – Flue Temperature Monitoring

Use the UP and Down buttons to select between PVC, CPVC/PP or OFF for the flue temperature monitor. Select PVC when using PVC vent materials. For CPVC, polypropylene or stainless steel vent materials use the CPVC/PP setting. While it is not recommended, the flue monitor may be turned off when using stainless steel vent. The Flue Monitor utilizes a temperature sensor in the stack and will reduce the firing rate of the heater when the vent temperature approaches the limits of PVC or CPVC/ polypropylene vent materials.

Max Fan RPM

Use the UP and Down buttons to adjust the maximum fan speed. Max Fan RPM may be adjusted from 7000-7500 RPM. It may be beneficial to reduce the Max Fan RPM at high altitude, for installations with long intake air ducting or to reduce sound levels. Reducing the fan RPM from 7500-7000 RPM will reduce the maximum input of the heater by 6 to 7%.

Pump Operation – Configure the Pump Control

Use the UP and Down buttons to select between Disabled, 1-Speed, 2-Speed, 4-Speed and Variable pump controls. Select Disabled if the heater controls will not be used to control the pump. The filter pump must be operating to allow the heater to fire.

- **1 Speed** – The control will close and open the Pump Relay activating the pump contactor to turn the pump on and off. The filter pump must be on before the heater can fire.
- **2 Speed** – The control will close and open the Pump Relay to turn the pump on and off and trigger Low speed operation. The Aux 2 Relay will close to enable High speed.
- **4 Speed** - The control will close and open the Pump Relay to turn the pump on and off (or to enable and disable a pump with full time power). The control will also power one of the Variable Pump outputs to select the pump speed. Pin 5 will enable Speed-1, Pin 4 Speed-2 , Pin 3 Speed-3 and Pin 2 Speed-4.
- **Variable** - The control will close and open the Pump Relay to turn the pump on and off (or to enable and disable a pump with full time power). Variable Pump output Pin 2 will provide a signal to directly control the speed of a pulse width modulation (‘PWM’) pump motor.

Spa Heat Speed (Selection available only with Pump Operation enabled and 2, 4 or variable-speed pump)

Use the UP and DOWN buttons to select between the available options. Available options will be based on the Pump Operation selected in the previous step. Spa Heat Speed must be set to provide a minimum of 40 GPM (151 lpm) to the heater.

Pool Heat Speed (Selection available only with Pump Operation enabled and 2, 4 or variable-speed pump)

Use the UP and DOWN buttons to select between the available options. Available options will be based on the Pump Operation previously selected. Pool Heat Speed must be set to provide a minimum of 40 GPM (151 lpm) to the heater.

Filter Speed (Selection available only with Pump Operation enabled and 2, 4 or variable-speed)

Use the UP and DOWN buttons to select between the available options. Available options will be based on the Pump Operation previously selected. Filter speed should be set to provide the required turns for proper sanitation, calculated based on the estimated Filter Speed flow rate, body of water volume and the scheduled pump on-time.

Freeze Protect (Selection available only with Pump Operation enabled)

Use the UP and DOWN buttons to enable or disable freeze protection. When Freeze Protect is enabled the control will monitor water temperature when in Remote and Run Schedule modes. If the water temperature sensor on the heater measures a temperature below 40°F (4°C) the control will activate the pump for 15 minutes. After 15 minutes the pump will shut off once the water temperature exceeds 42°F (6°C).

Valve Operation (Selection available only with Pump Operation enabled)

Use the UP and DOWN buttons to enable or disable operation of motorized three-way valves to send the return water to either the pool or the spa.

Return Valve (Selection available only with Valve Operation enabled).

Use the UP and DOWN buttons to define the valve positions for the Return Valve. Valve Position 1 can be set to Pool or Spa.

Suction Valve (Selection available only with Valve Operation enabled)

Use the UP and DOWN buttons to define the valve positions for the Suction Valve. Valve Position 1 can be set to Pool or Spa.

Valve Change Delay (Selection available only with Valve Operation enabled)

Use the UP and DOWN buttons to enable or disable the Valve Change Delay function. When enabled, the pump will be turned off for 30 seconds before the valves will begin to change positions. After 30 seconds for the valves to rotate (1 minute total off time) the pump will be re-started. If the water flow switch is closed (indicating water flow is present) when the control is attempting to change valve positions, “WPS Closed” will be indicated on the LCD, and the control will wait for the water flow switch to open before resuming operation.

Aux 1

Use the UP and DOWN buttons to select between OFF, Ext Heat, Remote Out and Aux Output.

- OFF – The Aux 1 relay is not used.
- Ext Heat – The Aux 1 Relay activates an external heat source when the thermostat has a call-for-heat. The external heat source operates as the first stage of heating with the master heater acting as the second stage, activating the second stage when the water temperature is 2°F (1.1°C) or more below setpoint.
- Remote Out - The Aux 1 relay will provide a parallel output to a remote device such as an external heat source when the thermostat has a call-for-heat. The master heater will operate according to thermostat demand with the Aux 1 relay closing 10 seconds after the master heater has started heating. The Aux 1 remote output will cease when the heat demand is satisfied.
- Aux Output - The Aux 1 relay will close and open according to the Run Schedule program or Manual Override commands.

Aux 2

Aux 2 provides a second relay output with the same options as Aux 1. Note that with 2-speed pumps Aux 2 will not be available as it is used to enable high pump speed.

Low Temp Lockout

Use the UP and DOWN buttons to enable or disable the low water temperature lockout function. Low Temp Lockout will prevent the pool heater from firing if water temperature is sensed below 36°F (2.2°C). The X94 is designed to operate with low inlet water temperatures under start up conditions, but it is not intended to maintain temperatures below 50°F (10°C) or operate with water temperatures below 36°F (2°C). Disabling the Low Temp Lockout is not recommended as operation with water temperatures below 36°F (2°C) will adversely affect heater life.

EcoNet Address

Use the UP and DOWN buttons to select the EcoNet Address, 1 to 16, for the heater when there are multiple pool heaters on an EcoNet network.

Set Factory Defaults

Use the UP and Down buttons to select Yes or No. Selecting Yes will return all installer and schedule settings to factory defaults.

Control Lockout

The heater is equipped with a Control Lockout feature to prevent unauthorized tampering or adjustment of the control settings. To lock out the controls, press the DOWN button and MODE button for 5 seconds. Choose a three digit PIN, using the UP and DOWN buttons to select the digits and the MODE button to lock in selections. Confirm your selection and record your PIN.

To unlock the controls, press any button to bring up the Enter PIN menu. Enter the PIN that was used to lock the control. Note that power cycling will not clear the lockout. Successfully unlocking the control will display “Lockout Cleared.” Failure to enter the correct PIN will display “Invalid PIN.”

In the event that the user-selected PIN is lost or does not clear the Control Lockout, use the Program Button to access the Installer Setup Mode to Set Factory Defaults. This will clear the PIN and allow normal operation and selection of a new PIN if desired. See "Installer Setup Mode" on page 30 for details.

The digital thermostat models are programmed to display a variety of status and diagnostic messages, depending on the operating conditions.

There is an 8-pin bank of DIP switches at the center of the board. Do not adjust these; they should all be in the DOWN position.

NOTE: The LCD temperature display may not agree with the temperature reading of your pool or spa thermometer. The heater reads the water temperature at the inlet to the heater. Due to the circulation characteristics of any pool or spa, the water temperature at the inlet to the heater may differ from that observed at a given location in the pool or spa.

Status and Diagnostics

The digital thermostat models are programmed to display a variety of status and diagnostic messages, depending on the operating conditions.

The heat status and error condition messages in **Table N** are displayed in Pool, Spa, and Remote modes.

The heat status messages are displayed only if there are no active fault conditions.

Display	Condition
WPS Stuck Closed	Valves not operated because the water flow switch is closed and Valve Chng Delay is enabled
Water Sw Open	Heat not running because the water flow switch is open
Valve Chng Delay	Pump/Heat shut off because of valve switching
High Heating	Second stage heat is running with EXT HEAT Aux mode
Heating	Heater is operating
Spark	Ignition control is running spark
Post Purge	Ignition control is in the post-purge period
Pre-Purge	Ignition control is in pre-purge or inter-purge
External Heat	External device is running 1st stage instead of Gas Ignition (EXT HEAT Aux mode)
No Demand	Heat demand is satisfied
H2O Sensor Fail	Water temperature sensors open, shorted, or disagree
Aux Ctrl Fault 2	ROM CRC failure on digital control board
Aux Ctrl Fault 3	RAM failure on digital control board
Aux Ctrl Fault 5	A/D Reference failure on digital control board
Aux Ctrl Fault 6	A/D Multiplexor failure on digital control board
Aux Ctrl Fault 8	Unable to read time of day clock
Ign Ctrl Fault 2	ROM CRC failure on Ignition Control Board
Ign Ctrl Fault 3	RAM failure on Ignition Control Board
Ign Ctrl Fault 5	A/D failure on Ignition Control Board
Ign Ctrl Fault 6	Flame sense circuit failure on Ignition Control Board
Ign Ctrl Fault 7	Out of sequence execution detected on Ignition Control Board
Hi Water Temp	Water temperature exceeded 108°F (43°C)
Remote Error	Both Spa and Pool inputs are energized
Hi Limit 1 Fault	High-Limit 1 is open
Hi Limit 2 Fault	High-Limit 2 is open
Blocked Vent	Vent/Field switch #1 is open
Vent Temp Limit	Vent Temp Limit switch is open
Clock/Fireman Sw	Clock/Fireman switch is open (Not stored in EEPROM)
Air Flow Sw Open	Air Pressure Switch open with inducer on
Air Flow Sw Closed	Air Pressure Switch closed with inducer off
5 Min Ind Off	Inducer off for 5 minutes because the inducer's interlock didn't close
Fan Lockout	3-fan switch faults within same heat demand cycle
Ignition Failure	No flame detected within 4 seconds (Natural gas only, not stored in EEPROM)
Ign 60 min Delay	Ignition trial failed 3-times in single call-for-heat (Natural Gas only, not stored in EEPROM)
Ignition Lockout	Ignition trial failed on Propane
MV Output Fault	Ignition control has detected problem with gas valve output
Flame w/o CFH	Ignition Control is sensing flame present with gas valve closed
Low Temp Lockout	Ignition Control has shut down heat because water temperature < 36°F (2.2°C)
EEPROM Fault	Corrupted data found on the Digital Control Board
Ign EEPROM Fault	Corrupted data found on the Ignition Control Board
Low Voltage	Displayed when supply voltage < 20V, no operational changes
Flue Over Temp	Heater shut off because flue temperature is too high
Flue Sense Fail	Flue Monitor is enabled and Flue temperature sensor is open or shorted
Blocked Drain	Condensate drain switch is closed
Fan RPM Fault	FAN RPM more than 500 RPM different than target

Table N. Error Condition Messages

Remote Control Installation and Operation

CAUTION: Before installing remote controls to the heaters, read the following:
The digital thermostat model is remote-ready in most cases. The digital liquid crystal display (LCD) shows the actual pool temperature, operating status, and service codes (See examples below). The touch pad on the control panel allows you to select the desired pool or spa temperature. It also indicates when a remote system is controlling the heater by displaying Remote in the display. When connecting the heater to a remote system, identify whether it is a two- or three-wire remote system. Select the appropriate instruction listed below to properly install the remote to the heater.

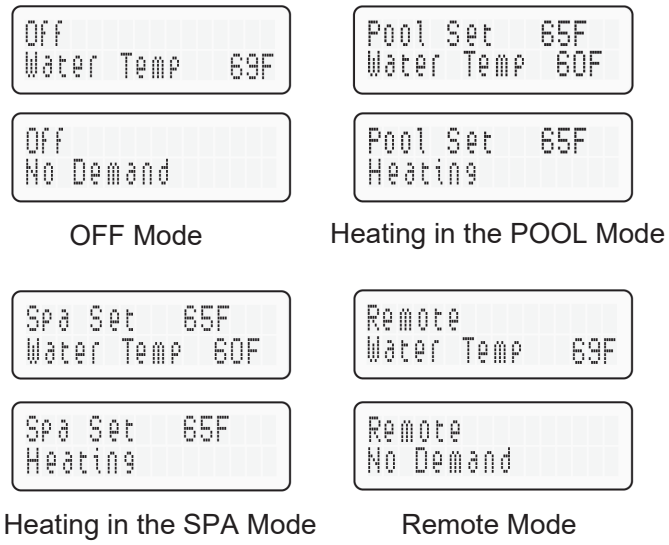

Figure 33. Modes

Figure 34. Harness

Remote Operation

The heaters are equipped with the ability to work with external remote controls. The supplied 7-pin remote wiring connector supplies power out to either a toggle switch or the switch contacts of a third party remote. The remote works by either making or breaking the circuit created by the remote wiring. Typically, a remote does not supply power to the heater, it only provides a switching function to turn the heater On or Off. **If your remote is supplying its own voltage to the heater, it will not work with this heater and may damage the digital circuit board.**

For operation of the heater using the on board thermostatic controls with a time clock, see "Time Clock/Fireman's Switch" on page 36.

Activating The Remote

To activate or deactivate the remote function, follow these steps:

Press and hold the UP and DOWN arrow buttons for 3 to 5 seconds.

Figure 35. Display

The second line of the display will alternate even when the unit is off ("No Demand").

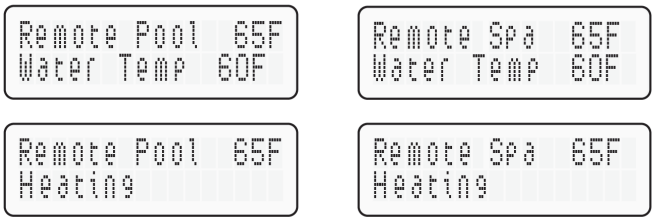

Figure 36. Remote Activation

NOTE: When in remote operation, the keypad mode and temp buttons are disabled.

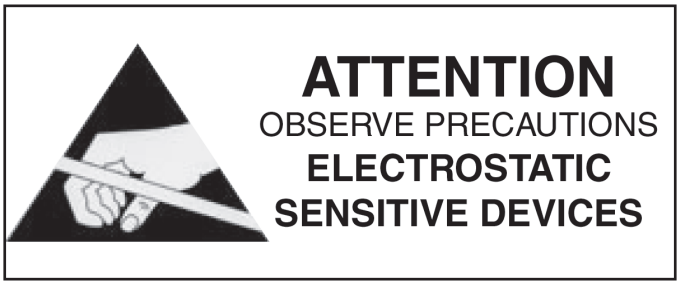

NOTE: Electrostatic Discharge (ESD) damage can be caused by direct or indirect contact with the wiring or circuit board. When one walks to the heater area, an electrostatic charge accumulates on the body. Contact of a finger allows the body to discharge, possibly causing device damage. This damage can be limited if the service person discharges himself, following ESD preventive/ removal practices, and holds on to the heater enclosure for 5 seconds before proceeding.

Remote Control Wiring

Important Installation Notes for Remote or External Wiring Configuration

- Remote wiring must be run in a separate conduit.
- Remote wiring must not be run parallel to high voltage lines.
- For runs of under 30 ft. (9.1 m), remote wiring should have stranded conductors with a minimum of 22 AWG, 600V, cable twisting 1.5 to 2.5 inch (38 to 64 mm) lay and jacketed.
- For runs over 30 ft. (9.1 m), the conductors should be a minimum of 20 AWG, 600V, cable twisting 1.5" (38 mm) to 2.5" (64 mm) to lay that is shielded and jacketed.
- Maximum cable length is 200 ft. (60.9 m).
- For both two- and three-wire remote systems, the provided 7-pin wiring connector must be utilized. Please refer to the wiring instructions.

NOTE: The remote wires must be connected to the 7-pin connector BEFORE the connector is plugged into the board.

2-Wire Remote Control (On-Off)

This application assumes that only one heating function (pool or spa) is required.

1. Turn on power to the heater.
2. For a 2-Wire Remote Control from a remote without its own sensor, push the mode button to the “POOL” or “SPA” mode and set the desired setpoint (e.g. 102 °F (39°C) for Spa).
3. For a 2-Wire Remote Control from a remote with its own sensor, push the mode button “POOL” or “SPA” mode and set the temperature to the highest setting available on the control. The actual setpoint will be controlled by the remote control.
4. Press the mode button to “OFF” and remove power from the heater.
5. On the “Remote Interface Harness”, connect the BLUE wire to one side of the “REMOTE” switch and connect the other side to either the ORANGE/BLACK wire for “SPA” operation or the BLACK/ORANGE wire for “POOL” operation.
6. Attach wire nut on unused wire to the “Remote Interface Harness.”
7. Install the “7-Pin Remote Interface Harness” to the P8 connector and turn power “ON” to the heater. To activate the remote control, see page 34.

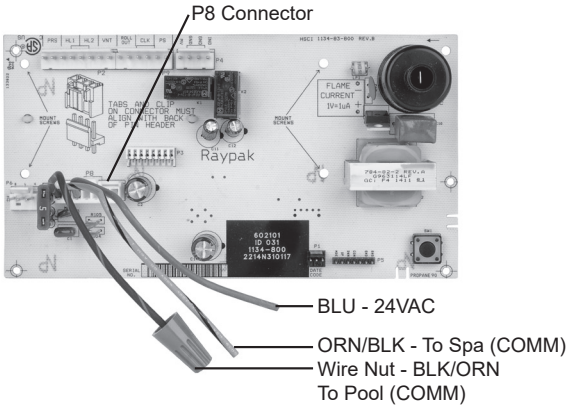

Figure 37. 2-Wire Remote Control

3-Wire Remote Control Using Three-Position Switch (Pool-Off-Spa, or Low-Off-High)

This application assumes that both heating functions (pool and spa) are required.

1. Turn on power to the heater.
2. Push the mode button to the “POOL” or “SPA” mode and set the desired temperature for each (e.g. 80°F (27°C) for Pool and 102°F (39°C) for Spa).
3. Press the mode button to “OFF” and remove power from the heater.
4. On the “Remote Interface Harness” connect the BLUE wire to one side of the “REMOTE” switch and connect the ORANGE/BLACK wire for “SPA” operation and the BLACK/ORANGE wire for the “POOL” operation.
5. Install the “Remote Interface Harness” to the P8 connector and turn power “ON” to the heater. To activate the remote control, see page 34.

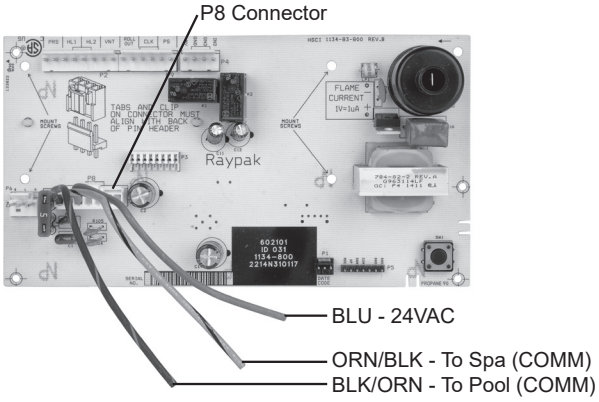

Figure 38. 3-Wire Remote Control

Time Clock/Fireman's Switch

To operate the heater with a time clock, connect the timer to the fireman's switch connection in the heater's wiring. The time clock should be of the dual switch type and set to shut off the call-for-heat to the pool heater 15 to 20 minutes prior to shutting down the pool pump. The fireman's switch connection is located on the 6-pin header connected to the digital control board. Splice into the red wire jumper tagged "Where necessary add "Fireman's" switch circuit here" to connect the time clock. The fireman's switch connection must be a dry contact and must not supply power to the heater. Powering the fireman's switch connection externally may damage the heater, and is not covered by warranty.

Do not exceed 50' (15.2 m) of total wiring using 18 AWG stranded copper wire rated for 105°C (221°F) minimum.

NOTE: When using a time clock, the heater will display "Clock/ Fireman Sw" when the fireman's switch is open, indicating that the time clock has shut off the call-for-heat.

High Limits

The heater is equipped with two automatic high limits. Both are located in the inlet/outlet header. Both are set to open at 135°F (57°C).

NOTE: An erratic high limit is often characteristic of an internal heat exchanger problem, e.g. scale build-up, defective bypass. Refer to "TROUBLESHOOTING" on page 42).

High Limit Removal

1. Shut off main electrical power switch to heater.
2. Remove front door.
3. Remove defective high limit and replace with a new high limit.
4. Replace inspection panel.

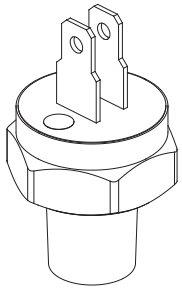

Figure 39. High Limit

Flow Switch

This standard, dual-purpose control, mounted and wired in series with the main gas valve, shuts off heater in case of pump failure or low water flow.

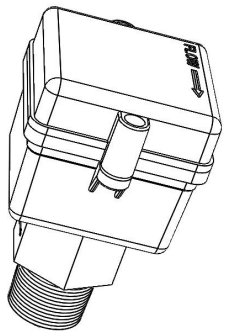

Figure 40. Flow Switch

Blocked Vent Switch

This heater is equipped with a blocked vent pressure switch to prevent the operation of the heater when the vent is blocked.

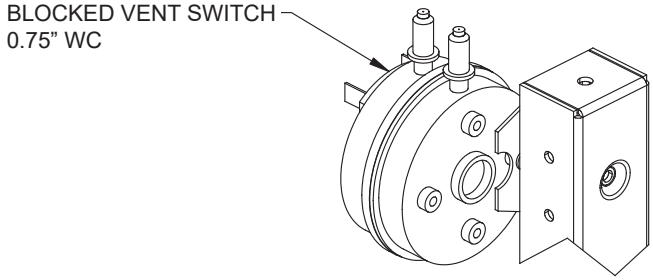

Figure 41. Blocked Vent Switch

Adjusting Valve Manifold Pressure

1. Gas manifold pressure is measured at the pressure tap between the gas valve and gas orifice (See **Figure 43**).
2. To increase the manifold pressure and increase the ratio of fuel to air turn the adjustment screw counterclockwise (toward the +) (See **Figure 42** For example, a reading of -2.0" WC (-0.5 kPa) can be increased to -1.5" WC (-0.4 kPa) by turning the adjustment screw counterclockwise. Increasing manifold pressure will increase the CO_2 percentage in the flue gases.
3. To decrease the manifold pressure and decrease the ratio of fuel to air turn the adjustment screw clockwise (toward the -) (See **Figure 42**). Decreasing manifold pressure will reduce the CO_2 percentage in the flue gases.

NOTE: Manifold pressure will decrease when the intake air filter becomes dirty. Replace the filter when manifold pressure drops to less than -2.5" WC or intake suction pressure is less than -1.0" WC.

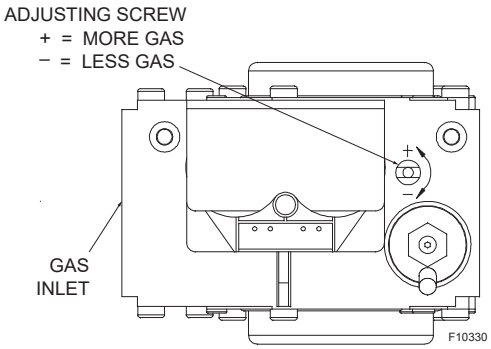

Figure 42. Gas Valve

Visual Inspection

Flames can be observed through the sight glass next to the igniter. A blue colored flame indicates normal operation. At least every three months a visual inspection should be made.

Electrical

Be sure that electrical service to the heater has proper overload fuse or circuit breaker protection, wire size and connections which comply with all applicable codes.

CAUTION: Prior to replacing any component, make sure that the main gas, power, and pumps are turned OFF.

Orifice Removal

The gas orifice is located on the gas train, between the gas valve and the combustion blower.

1. Locate and close the external manual shutoff valve.
2. Loosen the external gas union.
3. Locate and remove front door panel.
4. Locate and remove the (4) bolts & nuts holding the gas orifice in place. See **Figure 43** below.
5. Carefully remove the gas orifice and do not misplace the o-rings attached to the flanges.
6. Inspect and/or replace the orifice with the correct size.

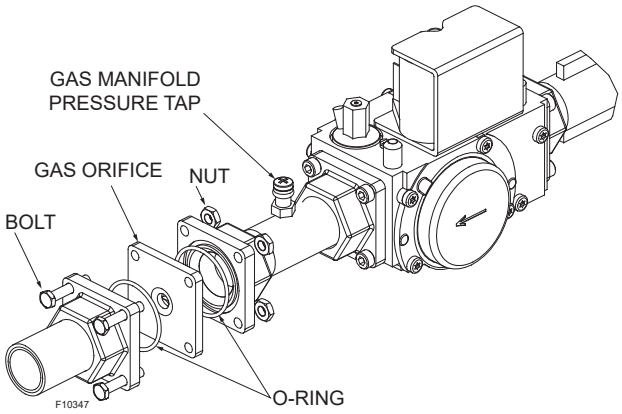

Figure 43. Gas Train

Combustion Settings

Verify that the gas orifice matches the fuel type supplied. The natural brass finish orifice is for natural gas and the black oxide finish orifice is for Propane. **Table O** shows the desired ranges for CO_2 % and limits for CO ppm. Follow the instructions from the Adjusting Valve Manifold Pressure section to make adjustments. Desired CO_2 % and max CO ppm apply to all firing rates, but firing rate must be stable for a good reading (fan RPM should not change more than 50 RPM while taking a sample).

Fuel Type	CO_2 Range (%)	CO Max (PPM)
Natural Gas	8.6 – 9.2	100
Propane	9.5 – 10.1	100

Table O. Combustion Settings

NOTE: Orifices for propane gas have a black oxide finish

Igniter Removal

1. Locate and remove the top panel.
2. Locate the igniter in front of the blower and burner.
3. Locate and disconnect the high tension spark cable from the igniter.
4. Using a 5/16” (8 mm) socket, remove the (2) bolts holding the igniter down.
5. Using a flat screw driver, loosen the igniter bracket from the combustion chamber, preferably on both sides.
6. Carefully remove the igniter from its location. In order to remove the igniter without damaging the refractory, it is necessary to rotate the igniter 90 degrees clockwise before lifting it out of the heater.
7. When replacing or inspecting the igniter, the gap between the ground & spark tips should be 0.15”± 0.01” (3.81± 0.25 mm). The gap between the spark and ground rods should be uniform and the rods should not be distorted. Inspect the ceramic insulator at the base of the spark rod carefully for cracks, replace the igniter if any defects are found.

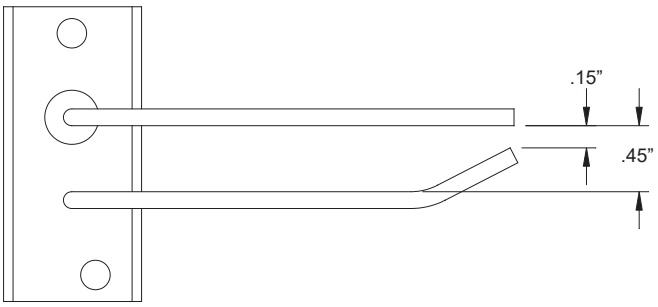

Figure 44. Igniter

7. OWNER'S OPERATING INSTRUCTIONS

FOR YOUR SAFETY - READ BEFORE OPERATING

⚠WARNING: IF YOU DO NOT FOLLOW THESE INSTRUCTIONS EXACTLY, A FIRE OR EXPLOSION MAY RESULT, CAUSING PROPERTY DAMAGE, PERSONAL INJURY OR LOSS OF LIFE.

INTRODUCTION

Your pool/spa heater has been designed for years of safe and reliable pool/spa water heating. It is available with electronic ignition. This manual provides installation, operation, maintenance, and service information for these heaters.

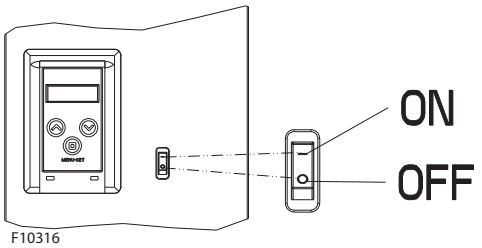

Figure 45. Heater Toggle Switch

With proper installation and setup, operation of the heater is straightforward. The upper front panel of the heater contains the control center that allows you to turn the heater On or Off, select the mode of operation, and adjust the temperature settings for the pool or spa. The temperature range is factory set from 50°F (18°C) to 104°F (40°C). See **Figure 44** above for location of toggle switch to turn the heater On and Off. Section 4 of this manual contains more details about the use of the controls (starting on "Control Adjustments" on page 29).

Start-Up Procedures

1. Clean air louvers of dust, lint and debris.
2. Keep heater area clear and free from combustibles, flammable liquids and chemicals.
3. Remove the top panel by removing the two screws at the rear of the heater and the knurled screw above the control panel. Lift the top panel off and set it aside. Visually verify that the filter box intake is not obstructed and that the filter is clean.
4. Water must be flowing through the heater during operation. Ensure that the system is filled with water and the pump is operating. Double check for any water leaks.
5. Purge air from the gas line. Insufficient purging may keep the heater from lighting on the first try.
6. Double check gas connections, make sure no leaks are present. Use soapy water to inspect.
7. Double check incoming electrical power, verify sufficient supply of 120V/1ph/60Hz power to the heater.
8. If installed indoors, make sure flue gases are vented properly, and that combustion and makeup air openings are adequate and clear of obstruction.
9. Verify that the fuel type of the unit matches the supply gas.
10. Locate and turn the manual gas valve ON.
11. Locate the plugged bleedle valve on the pipe downstream of the gas valve.
12. Remove the bleedle plug and connect a manometer capable of reading up to -24" WC (-6 kPa).

CAUTION: The X94 manifold and blower suction pressures measured at this point are negative, and can be as high as -19" WC (-4.73 kPa) when the blower is at full speed and the gas valve is closed. Verify that manometers are rated appropriately and set up to take measurements of this magnitude.

13. Locate and flip the display lid upwards.
14. Turn the heater on, by pressing the ON/OFF toggle switch on the front display.
15. Set the mode to either SPA or POOL. For installations utilizing the Raypak Expanded Function Board refer to the installation and set up instructions "Installer Setup Mode" on page 30 to set up the pump, valve and auxiliary functions prior to firing the heater.
16. If the set point is higher than the current temperature, the heater will begin its startup sequence.
17. The ignition control will verify that the blower relay is open before starting the blower. Once proven open, the blower will be powered to start the ignition sequence.
18. Once the blower relay proves, a 45 second pre-purge period will begin to purge the combustion chamber.
19. Once the pre-purge period ends, the igniter will begin to spark just prior to the gas valve opening. The gas valve will open for a 4 second trial for ignition. If flame is proven, the heater will operate to meet heat demand.

If flame is not proven, the heater will enter a post-purge period and then retry the ignition cycle or lockout, depending on the heater configuration.

20. Once gas is flowing, the manometer reading will drop to -0.2" +/- 0.1" WC (-0.05 +/- 0.02 kPa) at ignition and will read -2.0" +/- 0.5" WC (-0.5 +/- 0.12 kPa) at high fire (7500 +/- 50 RPM fan speed). See the instructions on page 36 for adjusting the valve manifold pressure if the reading is not within tolerance.

21. Visually check through the sight glass that the heater is on and heating. An orange glow indicates that the heater is running. At high fire, the flame should be visible. The flame should be blue in color with some orange streaks when the air/fuel ratio is correct. See the visual inspection instructions on page 37 for additional information.
22. Remove the manometer and replace the bleedle plug.
23. Reinstall top panel, install the two screws at the rear and knurled screw above the control panel.
24. Feel the inlet and outlet pipes. Outlet pipe should be 10°F to 20°F (6°C to 11° C) warmer than the inlet. It should not be hot.

8. MAINTENANCE AND CARE

Care Procedures

⚠WARNING: Check the heater for possible rodent nests after long periods of non-use.

To be followed one month after start-up and then semi-annually.

1. Inspect and operate all controls, gas valve and pressure relief valve.
2. On indoor heaters, clean room intake openings to ensure adequate flow of combustion and ventilation air.
3. Keep area around heater clear and free from combustible materials, gasoline and other flammable and corrosive vapors and liquids.
4. Visually inspect the intake air filter for damage or obstruction. If the filter is visually good, test the filter. If the intake suction reading when operating at 7500 RPM is more negative than -0.5" WC (-0.1 kPa) replace the filter.

CAUTION: Combustion air must not be contaminated by corrosive chemical fumes which can damage the heater. Such damage will not be covered under warranty.

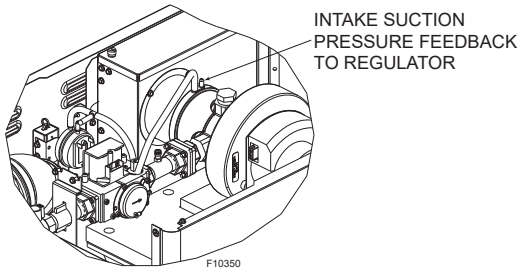

Figure 46. Air Intake Pressure Measurement Location

If Heater Will Not Fire:

If you have no electrical power, it may be that your “circuit breaker” has tripped. Try re-setting it.

If you have electrical power but the heater will not fire check the following or see Troubleshooting section on page 42:

1. The time clock must be in the “ON” position.
2. Your pump strainer basket may be full. If so, remove debris.
3. Your water filter may be dirty. If so, backwash or clean filter. (To tell if your filter is dirty, look to see if the filter pressure will be higher than usual).
4. The pump may have lost its prime and be running dry. Check the pressure on the filter. If there is no pressure; then you are not moving water (or your gauge is broken). Try to get the pump to run at its normal flow rate.

Lighting and Shutdown

⚠CAUTION: Propane gas is heavier than air and will settle on the ground. Since propane can accumulate in confined areas, extra care should be exercised when lighting propane heaters.

⚠WARNING: Should overheating occur or the gas supply fails to shutoff, turn off the manual gas control to the heater.

⚠AVERTISSEMENT: En cas de surchauffe ou si l'alimentation en gaz ne s'arrête pas, fermez manuellement le robinet d'arrêt de l'admission de gaz.

FOR YOUR SAFETY READ BEFORE OPERATING
POUR VOTRE SÉCURITÉ LISEZ AVANT DE METTRE EN MARCHE

WARNING: If you do not follow these instructions exactly, a fire or explosion may result causing property damage, personal injury or loss of life.
AVERTISSEMENT: Quiconque ne respecte pas a la lettre les instructions dans la présente notice risque de déclencher un incedie ou une explosion entraînant des dommages, des blessures ou la mort.

A. This appliance does not have a pilot. It is equipped with an ignition device which automatically lights the burner. Do not try to light the burner by hand.
B. BEFORE OPERATING smell all around the appliance area for gas. Be sure to smell next to the floor because some gas is heavier than air and will settle on the floor.
WHAT TO DO IF YOU SMELL GAS
* Do not try to light any appliance.
* Do not touch any electric switch; do not use any phone in your building.
* Immediately call your gas supplier from a neighbor's phone. Follow the gas supplier's instructions.
* If you cannot reach your gas supplier, call the fire department.
C. Use only your hand to turn the gas control ON or OFF. Never use tools. If you cannot change the ON/OFF setting by hand, do not try to repair it, call a qualified service technician. Force or attempted repair may result in a fire or explosion.
D. Do not use this appliance if any part has been under water. Immediately call a qualified service to inspect the appliance and to replace any part of the control system and any gas control which has been under water.

A. Cet appareil ne comporte pas de veilleuse. Il est muni d'un dispositif d'allumage qui allume automatiquement le brûleur. Ne tentez pas d'allumer le brûleur manuellement.
B. AVANT DE FAIRE FONCTIONNER, reniflez tout autour de l'appareil pour deceler une odeur de gaz. Reniflez prés du plancher, car certains gaz sont plus lourds que l'air et peuvent s'accumuler au niveau du sol.
QUE FAIRE SI VOUS SENTEZ UNE ODEUR DE GAZ:
* Ne pas tenter d'allumer d'appareil.
* Ne touchez à aucun interrupteur; ne pas vous servir des téléphones se trouvant dans le bâtiment.
* Appelez immédiatement votre fournisseur de gaz depuis un voisin. Suivez les instructions du fournisseur.
* Si vous ne pouvez rejoindre le fournisseur, appelez le service des incendies.
C. Utilisez seulement votre main pour tourner le contrôle du gaz "Marche" (ON) ou "D'Arret" (OFF). N'utilisez jamais d'outils. Si vous ne pouvez pas changer le réglage "Marche / D'Arret" (ON / OFF) à la main, ne pas essayer de le réparer, appelez un technicien qualifié.
D. N'utilisez pas cet appareil s'il a été plongé dans l'eau même partiellement. Faites inspecter l'appareil par un technicien qualifié et remplacez toute partie du systéme de contrôle et toute commande qui ont été plongés dans l'eau.

OPERATING INSTRUCTIONS
INSTRUCTIONS DE MISE EN MARCHE

1. **STOP!** Read the safety information above on this label.
2. Set the thermostat to the lowest setting.
3. Turn off all electric power to the appliance.
4. This appliance does not have a pilot. It is equipped with an ignition device which automatically lights the burner. Do not try to light the burner by hand.
5. Turn manual valve clockwise to "CLOSED" position.
6. Wait five (5) minutes to clear out any gas. Then smell for gas, including near the floor. If you smell gas STOP! Follow "B" in the safety information above on this label. If you don't smell gas, go to the next step.
7. Turn manual valve counterclockwise to "OPEN" position.
8. Turn on all electric power to the appliance.
9. Set thermostat to desired setting.
10. If the appliance will not operate, follow the instructions "To Turn Off Gas To Appliance" and call your service technician or gas supplier.

1. **ARRÊTEZ!** Lisez les instructions de sécurité sur la portion superieure de cette étiquette.
2. Réglez le thermostat à la température la plus basse.
3. Coupez l'alimentation électrique de l'appareil.
4. Cet appareil ne comporte pas de veilleuse. Il est muni d'un dispositif d'allumage qui allume automatiquement le bruleur. Ne tentez pas d'allumer le bruleur manuellement.
5. Tournez la valve dans le sens horaire à la position "ARRET"
6. Attendre cinq (5) minutes pour laisser échapper tout le gaz. Reniflez tout autour de l'appareil, y compris prés du plancher, pour déceler une odeur de gaz. Si vous sentez une odeur de gaz, ARRÊTEZ! Passez à l'étape "B" des instructions de sécurité sur la portion supérieure de cette étiquette. S'il n'y a pas d'odeur de gaz, passez à l'étape suivante.
7. Tournez la valve dans le sens antihoraire à la position "MARCHE"
8. Mettez l'appareil sous tension.
9. Réglez le thermostat à la température désirée.
10. Si l'appareil ne se met pas en marche, suivez les instructions intitulées "Comment couper l'admission de gaz de l'appareil" et appelez un technicien qualifié ou le fournisseur de gaz.

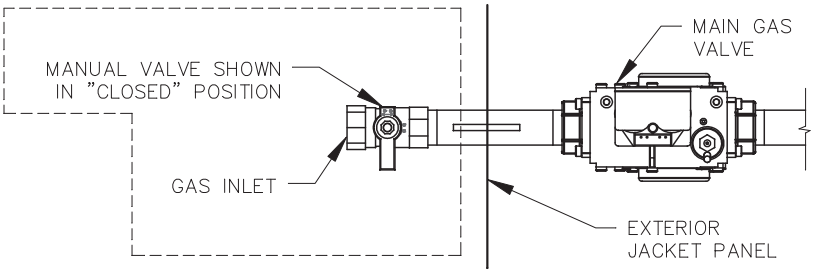

TO TURN OFF GAS TO APPLIANCE
COMMENT COUPER L'ADMISSION DE GAZ L'APPAREIL

1. Set the thermostat to the lowest setting.
2. Turn off all electrical power to the appliance if service is to be performed.
3. Turn manual valve clockwise to "CLOSED" position.

1. Réglez le thermostat à la température la plus basse.
2. Coupez l'alimentation électrique de l'appareil s'il faut procéder à l'entretien.
3. Tournez la valve dans le sens horaire à la position "ARRET"

P/N 902092 REV 2

Chlorination and Water Chemistry

See section "Water Chemistry" on page 6.

Cold Weather Operation

Important Freeze Information

MODERATE CLIMATE: Heater operation can continue during short-term cold spells. When temperatures are between 0°F (-18°C) and 32°F (0°C), flow (continuous pump operation) must be maintained.

CAUTION: Do not use the heater to maintain water temperatures just above freezing or for freeze protection. When heater is used during freezing weather, care must be taken to avoid freeze-ups. Continuous pump operation is a must. Additional protection may be required. The heater is not warranted against freeze-ups.

COLD CLIMATE: Prolonged operation with water temperatures below 50°F (10°C) is not recommended. When starting the heater with water temperatures below 50°F (10°C), operate the heater continuously until higher temperatures are reached. Operating the heater for prolonged periods with pool water below 50°F (10°C) can seriously damage the heater, and is not covered by the warranty. For cold climate areas, please follow the winterizing procedures listed below.

Winterizing the Pool and Spa Heater

Heaters installed outdoors in freezing climate areas may be shut down for the winter. Observe the following procedure for winterizing the heater:

1. Turn off gas valve, manual gas valve, and electrical supply to the heater.
2. Disconnect the field supplied condensate drain line from the condensate trap located below the inlet/outlet water connections.
3. Remove the access panel below the inlet/outlet water connections and connect a hose to the drain valve. Direct the hose discharge to a safe drainage location.
4. Open the drain valve and pull the PRV handle or open the union at the water outlet connection to allow the heater to drain.
5. Close the drain valve and disconnect the hose.
6. Remove the cap from the condensate trap. Disconnect, remove and drain the condensate trap and then re-install it.
7. Re-install the lower access panel and re-attach the condensate drain line to the trap.

9. TROUBLESHOOTING

Mechanical

IMPORTANT NOTICE These instructions are intended for the use of qualified personnel who are specifically trained and experienced in the installation of this type of heating equipment and related system components. Installation and service personnel may be required by some states to be licensed. Persons not qualified shall not attempt to install this equipment nor attempt repairs according to these instructions.

Problem	Cause	Solution
Harmonics, or whining noise	*Debris or restriction in system	Locate the restriction and remove. Flush system and clean.
	*Debris in gas line	Remove debris or blow out gas line.
	Low flow	Scale forming in heat exchanger-clean heat exchanger and using deliming kit (016281F) and check pool pH and total alkalinity
Heater going on and off with Water SW Open indication on LCD or in Fault History	Dirty filter	Clean or replace filter.
	Low water level in pool	Raise water level.
	External bypass setting out of adjustment	Adjust bypass
Valve opens but no flame visible	Manifold pressure too low	Increase manifold pressure (turn clockwise slightly).
Flame visible for a split second	Ignition not being sensed	Replace ignition wire. Check connections. Increase manifold pressure (turn clockwise slightly).
Liming or scale forming in exchanger	Pool water	See "Water Chemistry" on page 6.
	Bypassing too much water	Inspect bypass for movement, if no movement, replace.
Sooting	Low water temperatures.	Maintain water body temperatures above 50ºF (10ºC).
	*Air starvation	Refer to installation instructions.
	*Improper venting	Follow recommended installation instructions.
	*Insects or debris clogging burner intake ports	Clean burners with a gentle application of compressed air, do not use a brush.
Yellow lazy flame	Air intake clogged or incorrect fan operation	Check for debris upstream of fan intake. Check intake air filter suction pressure, replace filter if dirty.
	*Insects or debris clogging burner intake ports	Clean burners with a gentle application of compressed air, do not use a brush.
	Air intake feedback to regulator disconnected	Check that tubing between air intake adapter and regulator is connected and free of obstruction. See **Figure 46**.
Outer jacket very hot (paint blistered)	*Broken refractory caused by shipping damage or improper combustion	Replace refractory panels.
	Excessive sooting of heat exchanger	Determine cause of sooting & correct.
Hard lighting at startup	Igniter faulty	Replace igniter
Takes too long to heat pool or spa	Under-sized heater	Calculate heating capacity of heater or refer to heater sizing chart. (Heating Capacity = Htr. output (BTUH) ÷ Pool gallonage x 8.33) This does not take into account heat loss due to weather.
	Filter not running long enough	Reset time clock.
	Dirty filter	Clean filter.
	Gas line or meter undersized	Refer to installation instructions.
Leaking at T&P gauge	Overacid	Replace T&P gauge and maintain proper water chemistry.
Leaking at heat exchanger	Overacid	Replace heat exchanger and maintain proper water chemistry.
Gasket brittle and leaking - (overheated)	Refractory damage	Replace refractory.
	Sooted heater	Determine cause of sooting and correct.
Combustion fan not running “Fan 5 min Delay”, “Fan Lockout” or "Fan RPM Fault" indication	Fan relay	Replace fan relay.
	Fan	Loose connection or failed motor.
	Burned motor	Incorrect wiring, replace blower.
	Motor control failure	Replace blower.
Heater turns on for less than 4 seconds (no display error)	Wiring	Check for loose or broken (verify continuity) wiring/ground/ignition wire.
	Incorrect supply wiring	Check incoming power for correct voltage. There should be no power on the neutral line.
	PC Board short	Replace board if no strength signal is being detected.
	Ignition not sensed	Clean igniter with wire brush.

* Indicates symptom which usually occurs on initial start-up.

Control Logic - Flow Chart (Pool & Spa Modes)

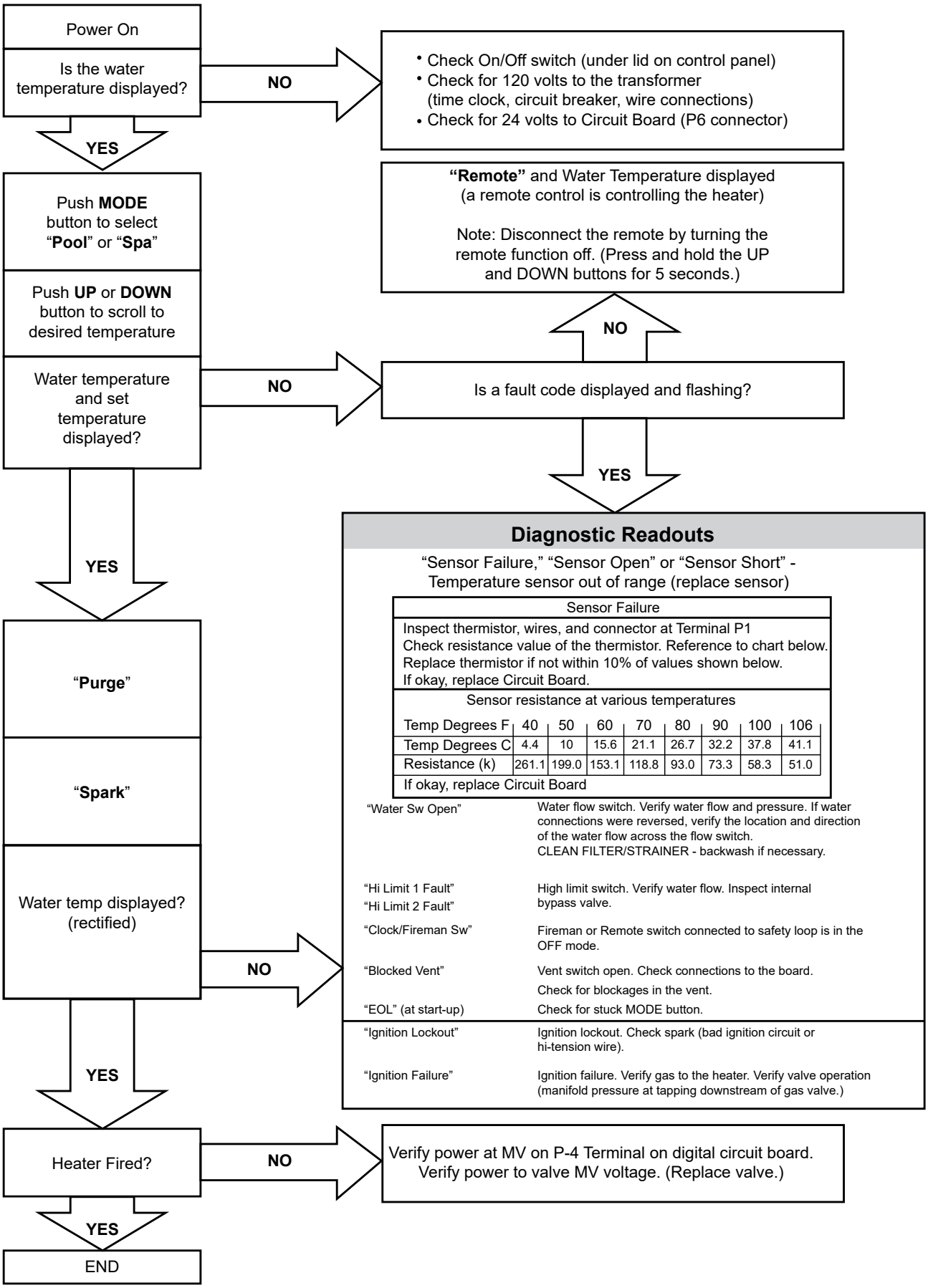

10. ILLUSTRATED PARTS LIST

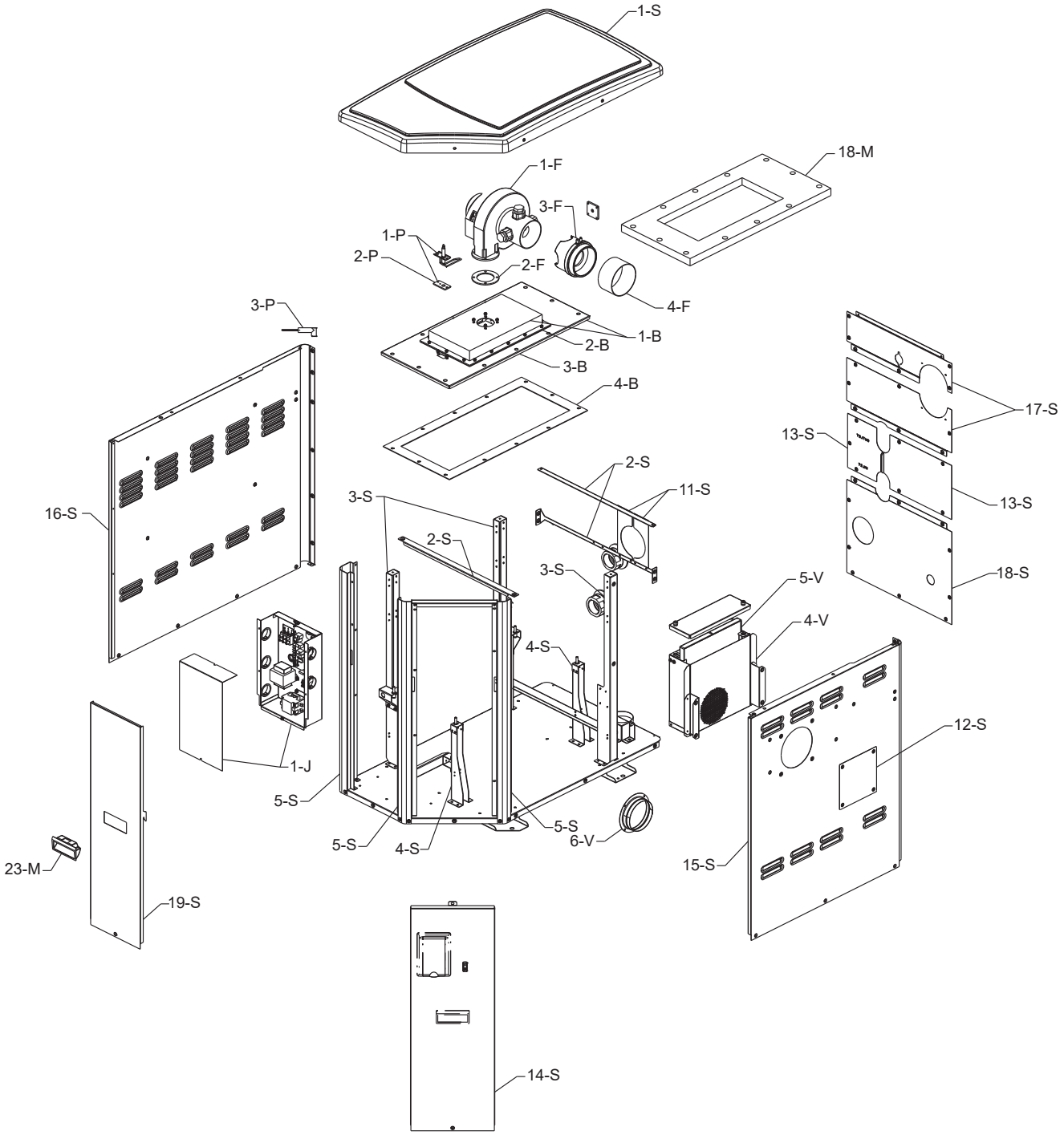

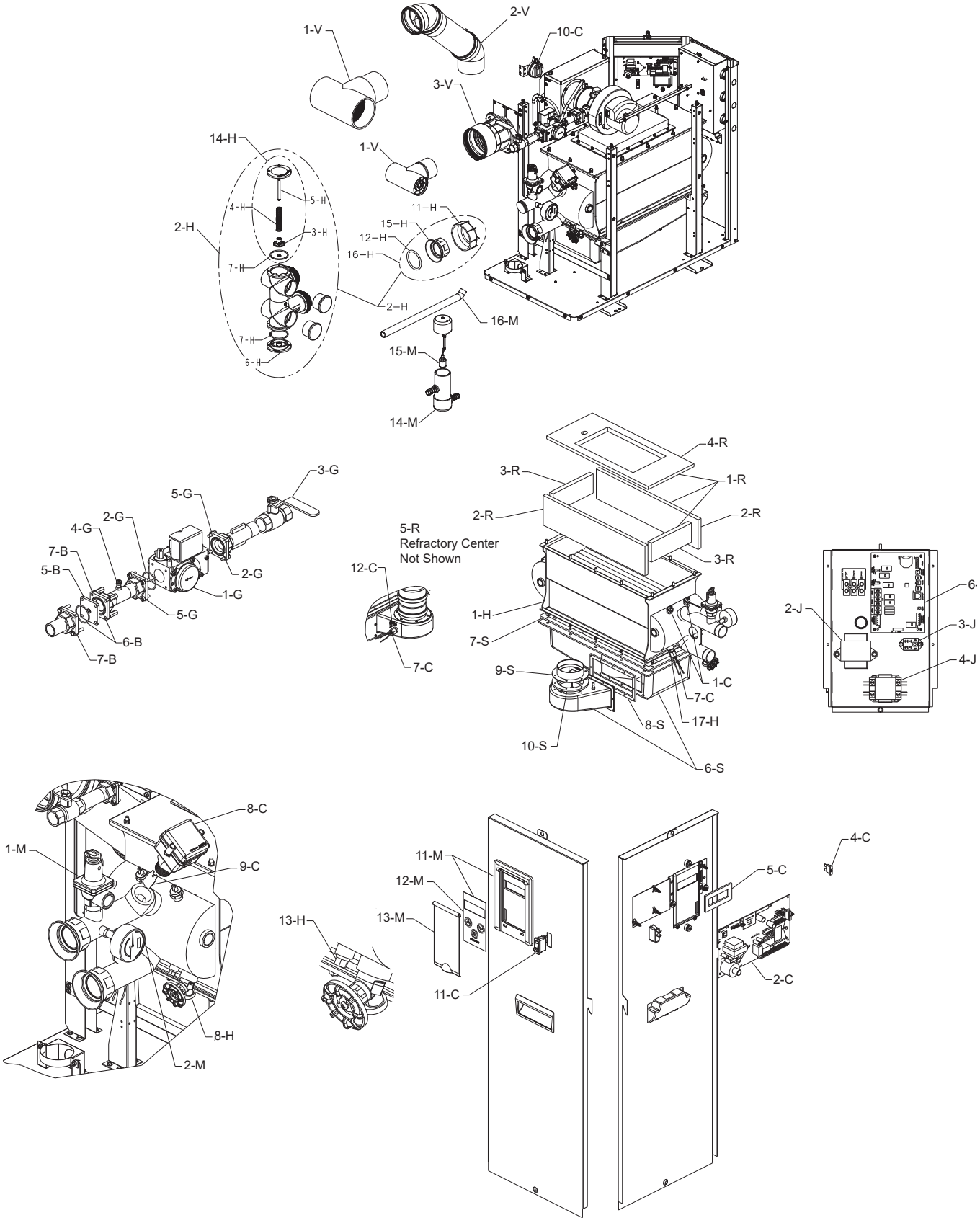
1-V
2-V
10-C
3-V
14-H
1-V
5-H
4-H
3-H
2-H
7-H
11-H
15-H
12-H
16-H
2-H
16-M
7-H
6-H
15-M
14-M
3-G
5-G
2-G
4-G
7-B
5-B
2-G
1-G
5-G
6-B
7-B
12-C
7-C
5-R
Refractory Center
Not Shown
4-R
3-R
1-R
2-R
2-R
3-R
1-H
7-S
9-S
1-C
7-C
17-H
8-S
10-S
6-S
2-J
6-
3-J
4-J
8-C
1-M
9-C
8-H
2-M
13-H
11-M
12-M
13-M
11-C
5-C
4-C
2-C

NOTE: To supply you with the correct part, it is important that you supply the heater model number, serial number and type of gas when applicable.

Any part returned for replacement under standard company warranties must be properly tagged with a return parts tag, completely filled in with the heater serial number, model number, etc., and shipped to the Company freight prepaid.

If determined defective by the Company and within warranty, a like part or equal substitution will be returned, freight collect. Credit will not be issued.

MANUFACTURER:

2151 Eastman Avenue

Oxnard, Ca 93030

CALL OUT	DESCRIPTION	410
B	**BURNER**	
1-B	Burner	015449F
2-B	Gasket seal	N/A
3-B	Burner Mounting Plate	N/A
4-B	Burner Plenum Gasket	015450F
5-B	Gas Orifice Natural (0-4,500 Ft)*	015452F
	Gas Orifice Propane (0-4,500 Ft)*	015453F
7-B	Gas Orifice Flange	015961F
6-B	Flange O-Ring	014089F
C	**CONTROLS**	
1-C	Thermostat Auto Reset 135 Deg F	600892B
2-C	P. C. Board/Ignition	100-10000719
4-C	Fuse 5 AMP	013733F
5-C	LCD Seal Gasket	014866F
6-C	P. C. Board Digital Control	015454F
7-C	Temperature Sensor Water/Flue	009577F
8-C	Water Flow Switch	015115F
9-C	Flow Switch Paddle	015831F
10-C	Switch Air Pressure (Vent/Field)	010354F
11-C	Rocker Switch	009493F
12-C	Vent Temp Limit Switch	013428F
F	**FAN**	
1-F	Blower	015455F
2-F	Blower Gasket	015456F
3-F	Combustion Air Venturi Adapter	015457F
4-F	Hose Duct 4" (Plastic)	015519F
5-F	Combustion Air Flange (not shown)	015527F
G	**GAS VALVE**	
1-G	Combination Gas Valve - Nat.	013942F
	Combination Gas Valve - Pro.	013942F
5-G	Inlet/Outlet Flange Adapter	015960F
2-G	Gas Valve Flange O-Ring Seal	014089F
3-G	Manual "A" On/Off Valve	013208F
4-G	Bleedle Valve 1/8" NPT	007423F
H	**HEAT EXCHANGER**	
1-H	Heat Transfer	015458F
13-H	Pipe Plug Brass 1/4" NPT	015726F
2-H	Bypass Manifold	015459F
6-H	Bypass Cap	015462F
8-H	Drain Valve 3/4" NPT	013475F
14-H	Bypass Valve Assy	016903F
3-H	Bypass Valve	006716F
4-H	Bypass Spring	015460F
5-H	Bypass Shaft	015461F
7-H	O-Ring Bypass Cap	015463F
15-H	Swivel Adapter Union 1-1/2"	015988F
16-H	CPVC Nut, Swivel Adapter, O-Ring (Includes 11-H, 12-H & 15-H)	015950F
11-H	CPVC Nut	N/A
12-H	O-Ring Adapter	015466F
17-H	Sensor Adapter	006714F
J	**CONTROL BOX**	
1-J	Control Box	N/A
2-J	Transformer 120/240/24V	014404F
3-J	Blower Relay DPDT 24V	011720F
4-J	Pump Contactor DPST 24V	009860F

*FOR INSTALLATIONS OVER 4,500 FEET ABOVE SEA LEVEL, DERATE 2.5% PER I,000 FEET ABOVE SEA LEVEL. CONSULT FACTORY.

CALL OUT	DESCRIPTION	410
M	**MISCELLANEOUS COMPONENTS**	
1-M	PRV 75 PSI	007223F
2-M	T & P Gauge (0-200 PSI)	014647F
3-M	Wire Harnesses (All Unit Harnesses)	015467F
4-M	Cabinet Harness	015468F
5-M	Blower Harness 120V	015469F
6-M	Gas Valve Harness	015470F
7-M	High Limit / Flow Switch Harness	015471F
8-M	Condensate Float Switch Harness	015472F
9-M	Pump Contactor Harness	015555F
10-M	Blower/Relay Harness	015554F
11-M	Control Bezel (Includes Switch Decal)	014886F
12-M	Switch/Decal-Membrane	014887F
13-M	Control Bezel Cover	014888F
14-M	Condensate Trap	015473F
15-M	Condensate Float Switch NC	013947F
16-M	Condensate Hose	013948F
17-M	Condensate Neutralizer (Not Shown)	100-10002839
18-M	Insulation Blanket	015474F
20-M	Touch-up Paint Cool Dark Gray (Not Shown)	750256
21-M	RTV Sealant 2.8 oz. (Not Shown)	008924F
22-M	Clear Silicone Sealant 10 oz (Not Shown)	015421F
23-M	Plastic Handle	012681F
P	**PILOT**	
1-P	Ignitor Direct Spark	015475F
2-P	Ignitor Gasket	015476F
3-P	Hi Tension Wire	100-10006138
R	**REFRACTORY**	
1-R	Refractory (All Panels)	015477F
2-R	Refractory Left & Right	015478F
3-R	Refractory Front & Rear	015479F
4-R	Refractory Top	015480F
5-R	Refractory Center	017174F
S	**SHEET METAL / CABINET**	
1-S	Jacket Top	015481F
2-S	Upper Cabinet Supports	015482F
3-S	Vertical Supports	015483F
4-S	Heat Transfer Vertical Supports	015484F
5-S	Vertical Cabinet Supports	015485F
6-S	Flue Collector	015486F
7-S	Flue Collector Seal Gasket	015487F
8-S	Flue Collector Outlet Gasket	015488F
9-S	Flue Exhaust Inlet Collar	015489F
10-S	Flue Exhaust Inlet Gasket	015490F
11-S	Flue Exhaust Outlet Support Bracket	015491F
12-S	Access Panel Intake Air	015521F
13-S	Access Panels Inlet/Outlet	015492F
14-S	Jacket Control Mounting Panel	015493F
15-S	Jacket Front Panel	015494F
16-S	Jacket Rear Panel	015495F
17-S	Jacket Side Panel Upper Right	015496F
18-S	Jacket Side Panel Lower Right	015497F
19-S	Jacket Side Panel Left	015498F
V	**VENTING/INTAKE AIR**	
1-V	Outdoor Vent Termination Tee	
	PVC Venting 4 IN.	015451
	Polypropylene Venting	N/A
2-V	Flue Exhaust Polypropylene Pipe Assy	015507F
3-V	Flue Exhaust Adapter 4" (PVC, Polyproplylene, or Stainless Steel)	015508F
4-V	Intake Air Filter Box	015520F
5-V	Air Filter Media	013290F
6-V	Intake Air Connection Flange (if required)	015527F

CONVERSION KITS*	410
Nat. to Pro.	015502F
Pro. to Nat.	015503F
Decal	100-10001010
*** Gas conversions are to be done only by a qualified agency.**	

If you need information for an older model heater, go to the Raypak website's model number history: https://www.raypak.com/technical-resources/documents/ link; or contact your Raypak representative for assistance.

Find a Raypak representative for Commercial or Pool product: https://www.raypak.com/commercial-sales-rep/ or https://www.raypak.com/pool-heater-sales-rep/.

11. IMPORTANT INSTRUCTIONS FOR THE COMMONWEALTH OF MASSACHUSETTS

The Commonwealth of Massachusetts requires compliance with regulation 248 CMR 4.00 and 5.00 for installation of through – the – wall vented gas appliances as follows:

(a) For all sidewall horizontally-vented gas-fueled equipment installed in every dwelling, building or structure used in whole or in part for residential purposes, including those owned or operated by the Commonwealth and where the sidewall exhaust vent termination is less than seven (7) feet above finished grade in the area of the venting, including but not limited to decks and porches, the following requirements shall be satisfied:

1. INSTALLATION OF CARBON MONOXIDE DETECTORS. At the time of installation of the sidewall horizontal-vented gas-fueled equipment, the installing plumber or gasfitter shall observe that a hard-wired carbon monoxide detector with an alarm and battery back-up is installed on the floor level where the gas equipment is to be installed. In addition, the installing plumber or gasfitter shall observe that a battery-operated or hard-wired carbon monoxide detector with an alarm is installed on each additional level of the dwelling, building or structure served by the sidewall horizontally-vented gas-fueled equipment. It shall be the responsibility of the property owner to secure the services of qualified licensed professionals for the installation of hard-wired carbon monoxide detectors

a. In the event that the sidewall horizontally-vented gas-fueled equipment is installed in a crawl space or an attic, the hard-wired carbon monoxide detector with alarm and battery back-up may be installed on the next adjacent floor level.

b. In the event that the requirements of this subdivision can not be met at the time of completion of installation, the owner shall have a period of thirty (30) days to comply with the above requirements; provided, however, that during said thirty (30) day period, a battery-operated carbon monoxide detector with an alarm shall be installed.

2. APPROVED CARBON MONOXIDE DETECTORS. Each carbon monoxide detector as required in accordance with the above provisions shall comply with NFPA 720 and be ANSI/UL 2034 listed and IAS certified.

3. SIGNAGE. A metal or plastic identification plate shall be permanently mounted to the exterior of the building at a minimum height of eight (8) feet above grade directly in line with the exhaust vent terminal for the horizontally-vented gas-fueled heating appliance or equipment. The sign shall read, in print size no less than one-half (1/2) inch in size, “GAS VENT DIRECTLY BELOW. KEEP CLEAR OF ALL OBSTRUCTIONS”.

4. INSPECTION. The state or local gas inspector of the sidewall horizontally-vented gas-fueled equipment shall not approve the installation unless, upon inspection, the inspector observes carbon monoxide detectors and signage installed in accordance with the provisions of 248 CMR 5.08(2)(a)1 through 4.

(b) EXEMPTIONS: The following equipment is exempt from 248 CMR 5.08(2)(a)1 through 4:

1. The equipment listed in Chapter 10 entitled “Equipment Not Required To Be Vented” in the most current edition of NFPA 54 as adopted by the Board; and

2. Product Approved sidewall horizontally-vented gas-fueled equipment installed in a room or structure separate from the dwelling, building or structure used in whole or in part for residential purposes.

(c) MANUFACTURER REQUIREMENTS - GAS EQUIPMENT VENTING SYSTEM PROVIDED. When the manufacturer of Product Approved sidewall horizontally-vented gas-fueled equipment provides a venting system design or venting system components with the equipment, the instructions provided by the manufacturer for installation of the equipment and the venting system shall include:

1. Detailed instructions for the installation of the venting system design or the venting system components; and

2. A complete parts list for the venting system design or venting system.

(d) MANUFACTURER REQUIREMENTS - GAS EQUIPMENT VENTING SYSTEM NOT PROVIDED. When the manufacturer of a Product Approved sidewall horizontally-vented gas-fueled equipment does not provide the parts for venting the flue gases, but identifies “special venting systems”, the following requirements shall be satisfied by the manufacturer:

1. The referenced “special venting system” instructions shall be included with the appliance or equipment installation instructions; and

2. The “special venting systems” shall be Product Approved by the Board, and the instructions for that system shall include a parts list and detailed installation instructions.

(e) A copy of all installation instructions for all Product Approved sidewall horizontally-vented gas-fueled equipment, all venting instructions, all parts lists for venting instructions, and/or all venting design instructions shall remain with the appliance or equipment at the completion of the installation.

12. INSTALLER SETUP RECORD

Use this sheet to record Installer Setup Mode settings. This record will simplify setup in the event it is necessary to Reset Factory Defaults or install a new control. It is also a helpful troubleshooting tool, allowing all setup parameters to be viewed on a single page.

Installer Setup Item	Write down or circle the Installer Setup setting	Default Setting
Celsius or Fahrenheit	°C or °F	Fahrenheit
Spa Max Temp		104°F
Pool Max Temp		104°F
Pool Fan Mode	Eco / Turbo	Turbo
Spa Fan Mode	Eco / Turbo / Comfort	Turbo
Flue Monitor	PVC / CPVC/PP / OFF	PVC
Max Fan RPM		7500 RPM
Pump Operation	Disabled / 1 Speed / 2 Speed / 4 Speed / Variable	Disabled
Spa Heat Speed		Disabled
Pool Heat Speed		Disabled
Filter Speed		Disabled
Freeze Protect		Enabled (with Pump Operation)
Valve Operation		Disabled (only available with pump operation enabled)
Return Valve		Position 1 = Pool (if enabled)
Suction Valve		Position 1 = Pool (if enabled)
Valve Change Delay		Disabled
Aux 1		OFF
Aux 2		OFF
Low Temperature Lockout		Enabled
EcoNet Address		16
Control Lockout PIN		

13. QR CODES

View this Installation Manual on your smart device.

This QR Code will take you to the most current version of the manual. Previous versions of manuals can be found in the document library at Raypak.com.

P/N: 241494 Manual X94 Pool and Spa SR-410